GENERAL	
G-000	PHASE B COVER SHEET
G-001	PHASE B DRAWING LIST- PAGE 1 OF 2
G-002	PHASE B DRAWING LIST- PAGE 2 OF 2
G-003	RENDERING - AERIAL VIEW
G-004	RENDERING - FRONT VIEW
G-005	GENERAL NOTES
G-006	ABBREVIATIONS AND LOCATION PLAN
G-007	SYMBOLS, LEGENDS AND TYPICAL MOUNTING HEIGHTS
G-008	ACCESSIBILITY & ADAPTABILITY NOTES
G-010	PROJECT BOUNDARY
G-020	SITE PLAN - WEST
G-021	SITE PLAN - EAST
G-030	EXISTING CONDITIONS - WEST
G-031	EXISTING CONDITIONS - EAST
G-032	LOGISTICS AND SITE SECURITY PLANS
G-033	DEP DEMOBILIZATION PLAN
G-050	BORING LOG - WEST
G-051	BORING LOG - EAST
G-052.0	GEOTECHNICAL DESIGN REPORT FOR REFERENCE - COVER SHEET
G-052.1	GEOTECHNICAL DESIGN REPORT FOR REFERENCE - PAGE 1 OF 13
G-052.2	GEOTECHNICAL DESIGN REPORT FOR REFERENCE - PAGE 2 OF 13
G-052.3	GEOTECHNICAL DESIGN REPORT FOR REFERENCE - PAGE 3 OF 13
G-052.4	GEOTECHNICAL DESIGN REPORT FOR REFERENCE - PAGE 4 OF 13
G-052.5	GEOTECHNICAL DESIGN REPORT FOR REFERENCE - PAGE 5 OF 13
G-052.6	GEOTECHNICAL DESIGN REPORT FOR REFERENCE - PAGE 6 OF 13
G-052.7	GEOTECHNICAL DESIGN REPORT FOR REFERENCE - PAGE 7 OF 13
G-052.8	GEOTECHNICAL DESIGN REPORT FOR REFERENCE - PAGE 8 OF 13
G-052.9	GEOTECHNICAL DESIGN REPORT FOR REFERENCE - PAGE 9 OF 13
G-053.0	GEOTECHNICAL DESIGN REPORT FOR REFERENCE - PAGE 10 OF 13
G-053.1	GEOTECHNICAL DESIGN REPORT FOR REFERENCE - PAGE 11 OF 13
G-053.2	GEOTECHNICAL DESIGN REPORT FOR REFERENCE - PAGE 12 OF 13
G-053.3	GEOTECHNICAL DESIGN REPORT FOR REFERENCE - PAGE 13 OF 13
G-060	CLUBHOUSE GEOMETRY SETTING OUT - BASEMENT
G-061	CLUBHOUSE GEOMETRY SETTING OUT - FIRST FLOOR
G-062	CLUBHOUSE GEOMETRY SETTING OUT - ROOF

LANDSCAPE & IRRIGATION	
L-000	LANDSCAPE COVER SHEET
L-001	LANDSCAPE AND IRRIGATION GENERAL NOTES & MASTER LEGEND
L-102	DEMOLITION & REMOVALS PLAN SHEET 3
L-103	DEMOLITION & REMOVALS PLAN SHEET 4
L-104	DEMOLITION & REMOVALS PLAN- STAGING + TREE REMOVALS
L-112	TREE PROTECTION PLAN - SOUTHEAST
L-113	TREE PROTECTION PLAN - EAST
L-114	EXISTING TREE INVENTORY LISTS
L-115	EXISTING TREE REMOVAL LIST
L-119	WALL KEY PLAN

L-122	SITE MATERIALS PLAN SOUTHEAST
L-123	SITE MATERIALS PLAN EAST
L-124	SITE MATERIALS PLAN CLUBHOUSE ROOF
L-125	SITE MATERIALS PLAN CLUBHOUSE ROOF
L-126	SITE MATERIALS PLAN SOUTHEAST ENLARGEMENT
L-127	SITE MATERIALS PLAN SOUTHEAST ENLARGEMENT
L-128	SITE MATERIALS PLAN SOUTHEAST ENLARGEMENT
L-129	SITE MATERIALS PLAN SOUTHEAST ENLARGEMENT
L-132	SITE GRADING PLAN SOUTHEAST
L-133	SITE GRADING PLAN EAST
L-134	GRADING PLAN: CLUBHOUSE ROOF
L-135	GRADING PLAN: CLUBHOUSE ROOF
L-136	GRADING PLAN: CLUBHOUSE ROOF
L-137	SITE GRADING PLAN ENLARGEMENT
L-138	SITE GRADING PLAN ENLARGEMENT
L-142	LAYOUT PLAN SOUTHEAST
L-143	LAYOUT PLAN WEST
L-144	LAYOUT PLAN CLUBHOUSE ROOF
L-145	LAYOUT PLAN CLUBHOUSE ROOF
L-146	LAYOUT PLAN CLUBHOUSE ROOF
L-147	LAYOUT PLAN ENLARGEMENT
L-148	LAYOUT PLAN ENLARGEMENT
L-149	LAYOUT PLAN ENLARGEMENT
L-150	LAYOUT PLAN ENLARGEMENT
L-151	LAYOUT PLAN ENLARGEMENT
L-152	LAYOUT PLAN ENLARGEMENT
L-153	LAYOUT PLAN ENLARGEMENT - CLUBHOUSE ROOF

L-162	SITE PLANTING SOILS PLAN SOUTHWEST
L-163	SITE PLANTING SOILS PLAN SOUTHEAST
L-164	SOILS PLAN CLUBHOUSE ROOF
L-172	TREE PLANTING PLAN SOUTHEAST
L-173	TREE PLANTING PLAN EAST
L-176	UNDERSTORY PLANTING PLAN SOUTHEAST
L-177	UNDERSTORY PLANTING PLAN EAST
L-178	PLANTING PLAN CLUBHOUSE ROOF
L-182	UNDERSTORY PLANTING PLAN SOUTHEAST
L-183	UNDERSTORY PLANTING PLAN SOUTHEAST
L-184	UNDERSTORY PLANTING PLAN SOUTHEAST
L-185	UNDERSTORY PLANTING PLAN SOUTHEAST
L-186	UNDERSTORY PLANTING PLAN SOUTHEAST
L-187	UNDERSTORY PLANTING LISTS
L-188	UNDERSTORY PLANTING LISTS
L-192	TREE PLANTING COORDINATES PLAN SOUTHWEST
L-193	TREE PLANTING LAYOUT PLAN SOUTHEAST

L-204	IRRIGATION PLAN
L-205	IRRIGATION PLAN
L-206	IRRIGATION PLAN
L-207	IRRIGATION PLAN
L-208	IRRIGATION PLAN
L-210	SITE LIGHTING PLAN SOUTHEAST
L-211	SITE LIGHTING PLAN EAST
L-220	IRRIGATION PLAN GREEN ROOF (1 of 3)
L-221	IRRIGATION PLAN GREEN ROOF (2 of 3)
L-222	IRRIGATION PLAN GREEN ROOF (3 of 3)
L-300	LANDSCAPE SITE SECTION AT PLAZA 1
L-301	LANDSCAPE SITE SECTION AT PLAZA 2
L-302	LANDSCAPE SITE SECTION: DPR PARKING LOT TURNAROUND
L-303	LANDSCAPE SITE ELEVATION - JEROME AVENUE
L-305	LANDSCAPE SITE WALL ELEVATION - WALLS 17A, 17B, 17C, 17D
L-306	LANDSCAPE SITE WALL ELEVATION - WALLS 19,20,38
L-314	WETLAND CELL SITE SECTIONS
L-322	LANDSCAPE SITE WALL SECTIONS - WALL 38
L-400	PAVING DETAILS
L-401	PLANK PAVING DETAILS
L-402	PAVING DETAILS
L-403	CURBS, HEADERS, & STEEL EDGING DETAILS
L-404	RAMPS & DROP CURB LAYOUT DETAILS
L-405	ROCKERY DETAILS
L-412	WETLAND LINER DETAILS
L-413	ROCKERY TYPE AND KEY PLAN
L-417	ROCKERY LAYOUT
L-418	ROCKERY LAYOUT
L-419	ROCKERY LAYOUT
L-421	GABION WALL DETAILS
L-422	LEVEL CONCRETE WEIR WALL AND FOREBAY DETAILS
L-423	WEIR DETAILS
L-425	CELL 6 WALL DETAILS
L-427	WALL JUNCTION DETAILS
L-428	FENCE DETAILS
L-431	PARKING/ACCESS CONTROL AT CLUBHOUSE PARKING LOT
L-432	PARKING ACCESS CONTROL
L-436	RAILING AT CELL 6 OVERLOOK
L-440	SITE FURNITURE DETAILS: FLAGPOLE & BIKE RACK & BOLLARD
L-441	SITE FURNITURE DETALS: BENCH
L-460	TREE PROTECTION DETAILS
L-461	SITE PLANTING DETAILS ON GRADE
L-463	CLUBHOUSE GREEN ROOF SITE SECTIONS & DETAILS
L-464	CLUBHOUSE GREEN ROOF SITE SECTIONS & DETAILS
L-465	WILDLIFE EXCLUSION BARRIER DETAILS
L-466	IRRIGATION PUMP HOUSE PLANS
L-467	IRRIGATION DETAILS
L-468	IRRIGATION DETAILS
L-469	IRRIGATION DETAILS
L-479	IRRIGATION DETAILS
L-480	CLUBHOUSE ROOF PLANTING PLAN ENLARGEMENT
L-481	CLUBHOUSE ROOF PLANTING PLAN ENLARGEMENT
L-482	CLUBHOUSE ROOF PLANTING PLAN ENLARGEMENT
L-483	CLUBHOUSE ROOF PLANTING PLAN ENLARGEMENT
L-484	CLUBHOUSE ROOF PLANTING PLAN ENLARGEMENT
L-485	CLUBHOUSE ROOF PLANTING PLAN ENLARGEMENT
L-486	CLUBHOUSE ROOF PLANTING PLAN ENLARGEMENT
L-487	CLUBHOUSE ROOF PLANTING PLAN ENLARGEMENT
L-490	LIGHTING INSTALLATION DETAILS
L-491	LIGHTING INSTALLATION DETAILS
L-492	LIGHTING INSTALLATION DETAILS

CIVIL	
C-001	CIVIL ABBREVIATIONS AND NOTES
C-002	CIVIL PROPOSED SITE CONDITIONS - OVERALL PLAN
C-102	EROSION CONTROL PLAN
C-103	EROSION CONTROL PLAN
C-107	REMOVALS AND DEMOLITION
C-108	REMOVALS AND DEMOLITION
C-112	STORM DRAINAGE PLAN - SHEET 1
C-113	STORM DRAINAGE PLAN - SHEET 2
C-122	SANITARY SEWER PLAN - SHEET 1
C-132	UTILITY PLAN - SHEET 1
C-133	UTILITY PLAN - SHEET 2
C-202	WATER RE-USE PLAN
C-302	BUILDERS PAVEMENT PLAN
C-303	BUILDERS PAVEMENT PLAN
C-400	SANITARY SEWER PROFILES
C-401	STORM SEWER PROFILES
C-402	STORM SEWER PROFILES
C-403	STORM SEWER PROFILES
C-404	STORM SEWER PROFILES
C-500	DETAILS I
C-501	DETAILS II
C-502	DETAILS III
C-503	DETAILS IV
C-504	DETAILS V
C-505	DETAILS VI
C-506	DETAILS VII
C-507	DETAILS VIII - SEQUENCING PLAN

ARCHITECTURE	
A-000	ARCHITECTURAL COVER SHEET
A-001	BASEMENT KEY PLAN
A-002	FIRST FLOOR KEY PLAN
A-003	ROOF KEY PLAN
A-010	EAST ELEVATION (UNFOLDED)
A-011	WEST ELEVATION (UNFOLDED)
A-020	LONGITUDINAL SECTION (UNFOLDED)
A-030	LIFE SAFETY ANALYSIS
A-031	LIFE SAFETY PLANS - BASEMENT & FIRST FLOOR
A-032	LIFE SAFETY PLANS - ROOF
A-050	SLAB LAYOUT - FIRST FLOOR (1 of 2)
A-051	SLAB LAYOUT - FIRST FLOOR (2 of 2)
A-102	ENLARGED BASEMENT PLAN (1 of 8)
A-103	ENLARGED BASEMENT PLAN (2 of 8)
A-104	ENLARGED BASEMENT PLAN (3 of 8)
A-105	ENLARGED BASEMENT PLAN (4 of 8)
A-106	ENLARGED BASEMENT PLAN (5 of 8)
A-107	ENLARGED BASEMENT PLAN (6 of 8)
A-108	ENLARGED BASEMENT PLAN (7 of 8)
A-109	ENLARGED BASEMENT PLAN (8 of 8)
A-110	ENLARGED FIRST FLOOR PLAN (1 of 7)
A-111	ENLARGED FIRST FLOOR PLAN (2 of 7)
A-112	ENLARGED FIRST FLOOR PLAN (3 of 7)
A-113	ENLARGED FIRST FLOOR PLAN (4 of 7)
A-114	ENLARGED FIRST FLOOR PLAN (5 of 7)
A-115	ENLARGED FIRST FLOOR PLAN (6 of 7)
A-119	ENLARGED FIRST FLOOR PLAN (7 of 7)

A-120	ENLARGED ROOF PLAN (1 of 9)
A-121	ENLARGED ROOF PLAN (2 of 9)
A-122	ENLARGED ROOF PLAN (3 of 9)
A-123	ENLARGED ROOF PLAN (4 of 9)
A-124	ENLARGED ROOF PLAN (5 of 9)
A-125	ENLARGED ROOF PLAN (6 of 9)
A-126	ENLARGED ROOF PLAN (7 of 9)
A-127	ENLARGED ROOF PLAN (8 of 9)
A-128	ENLARGED ROOF PLAN (9 of 9)
A-132	BASEMENT REFLECTED CEILING PLAN (1 of 7)
A-133	BASEMENT REFLECTED CEILING PLAN (2 of 7)
A-134	BASEMENT REFLECTED CEILING PLAN (3 of 7)
A-135	BASEMENT REFLECTED CEILING PLAN (4 of 7)
A-136	BASEMENT REFLECTED CEILING PLAN (5 of 7)
A-137	BASEMENT REFLECTED CEILING PLAN (6 of 7)
A-138	BASEMENT REFLECTED CEILING PLAN (7 of 7)
A-140	FIRST FLOOR REFLECTED CEILING PLAN (1 of 9)
A-141	FIRST FLOOR REFLECTED CEILING PLAN (2 of 9)
A-142	FIRST FLOOR REFLECTED CEILING PLAN (3 of 9)
A-143	FIRST FLOOR REFLECTED CEILING PLAN (4 of 9)
A-144	FIRST FLOOR REFLECTED CEILING PLAN (5 of 9)
A-145	FIRST FLOOR REFLECTED CEILING PLAN (6 of 9)
A-146	FIRST FLOOR REFLECTED CEILING PLAN (7 of 9)
A-147	FIRST FLOOR REFLECTED CEILING PLAN (8 of 9)
A-148	FIRST FLOOR REFLECTED CEILING PLAN (9 of 9)
A-150	FIRST FLOOR FINISHES PLAN (1 of 4)
A-151	FIRST FLOOR FINISHES PLAN (2 of 4)
A-152	FIRST FLOOR FINISHES PLAN (3 of 4)
A-153	FIRST FLOOR FINISHES PLAN (4 of 4)
A-200	ENLARGED EAST ELEVATION (UNFOLDED) - (1 of 8)
A-201	ENLARGED EAST ELEVATION (UNFOLDED) - (2 of 8)
A-202	ENLARGED EAST ELEVATION (UNFOLDED) - (3 of 8)
A-203	ENLARGED EAST ELEVATION (UNFOLDED) - (4 of 8)
A-204	ENLARGED EAST ELEVATION (UNFOLDED) - (5 of 8)
A-205	ENLARGED EAST ELEVATION (UNFOLDED) - (6 of 8)
A-206	ENLARGED EAST ELEVATION (UNFOLDED) - (7 of 8)
A-207	ENLARGED EAST ELEVATION (UNFOLDED) - (8 of 8)
A-208	ENLARGED NORTH ELEVATION
A-209	ENLARGED WEST ELEVATION (UNFOLDED) - (1 of 8)
A-210	ENLARGED WEST ELEVATION (UNFOLDED) - (2 of 8)
A-211	ENLARGED WEST ELEVATION (UNFOLDED) - (3 of 8)
A-212	ENLARGED WEST ELEVATION (UNFOLDED) - (4 of 8)
A-213	ENLARGED WEST ELEVATION (UNFOLDED) - (5 of 8)
A-214	ENLARGED WEST ELEVATION (UNFOLDED) - (6 of 8)
A-215	ENLARGED WEST ELEVATION (UNFOLDED) - (7 of 8)
A-216	ENLARGED WEST ELEVATION (UNFOLDED) - (8 of 8)
A-217	ENLARGED SOUTH ELEVATION
A-218	STONE WALL TYPES - ELEVATIONS
A-300	ENLARGED BUILDING SECTION
A-301	ENLARGED BUILDING SECTION
A-302	ENLARGED BUILDING SECTION
A-303	ENLARGED BUILDING SECTION THROUGH OFFICE
A-304	ENLARGED BUILDING SECTION THROUGH CORRIDOR
A-305	ENLARGED BUILDING SECTION THROUGH LOCKER ROOM / TEE BOX
A-306	ENLARGED BUILDING SECTION THROUGH CART STORAGE / TEE BOX
A-307	ENLARGED BUILDING SECTION THROUGH DEP PUMP ROOM / TEE BOX
A-308	ENLARGED BUILDING SECTION THROUGH TEE BOX
A-309	ENLARGED BUILDING SECTION AT BASEMENT ENTRANCE
A-310	ENLARGED BUILDING SECTION THROUGH TEE BOX
A-400	INTERIOR ELEVATIONS
A-401	INTERIOR ELEVATIONS
A-402	INTERIOR ELEVATIONS - BATHROOMS
A-600	POD ENLARGED PLAN
A-601	POD ENLARGED RCP
A-602	POD ELEVATIONS AND SECTIONS
A-603	POD ELEVATIONS AND SECTIONS
A-604	POD INTERIOR ELEVATIONS
A-605	POD MILLWORK DETAILS
A-606	POD MILLWORK DETAILS
A-607	POD PLAN DETAILS
A-608	WOOD SLAT DETAILS
A-609	POD KITCHEN INTERIOR ELEVATIONS

A-610	TEE BOX CANOPY SYSTEM DRAWING
A-611	TEE BOX LIGHT POLE SYSTEM DRAWING
A-613	TEE BOX GEOMETRY DRAWING
A-614	TEE BOX PRECAST DETAILS
A-615	TEE BOX CONCRETE DETAILS
A-616	TEE BOX STEEL DETAILS
A-617	TEE BOX FABRIC DETAILS
A-618	TEE BOX DIVIDER
A-619	TEE BOX FALL SAFE SHELF
A-620	TEE BOX ACCESSORIES
A-635	WATER FEATURE SYSTEM DRAWING
A-640	BRIDGE AT DRIVING RANGE BRIDGE
A-641	WETLAND CELL PUMP ROOM - WET WELL SECTION & PLAN
A-642	IRRIGATION PUMP ROOM - WET WELL SECTION & PLAN
A-643	WATER FEATURE PUMP ROOM - PUMP ROOM SECTION & PLAN
A-650	STAIR #1 ELEVATION AND SECTION
A-651	STAIR #1 DETAILS
A-652	STAIR #2 SECTIONS & DETAILS
A-653	STAIR #3 ELEVATIONS AND SECTIONS
A-655	STAIR #5 SECTION, & ELEVATION
A-656	STAIR #6 PLAN, SECTION, & ELEVATION
A-657	RAMP #1 SECTIONS & DETAILS
A-662	WOOD CEILING PANEL TYPES
A-664	GFRC EAVE PANEL TYPES
A-665	GFRC EAVE PANEL TYPES - CONT
A-750	CURTAIN WALL AND CLERESTORY GLAZING GEOMETRY
A-751	WALL SECTIONS THROUGH CURTAINWALL
A-752	WALL SECTIONS THROUGH SOUTH CURTAIN WALL
A-753	WALL SECTIONS THROUGH EXTERIOR STONE CLADDING
A-810	EAST & WEST FACADE GLAZING DETAILS
A-811	EAST & WEST FACADE GLAZING DETAILS
A-812	SOUTH FACADE GLAZING DETAILS
A-813	SOUTH FACADE GLASS VESTIBULE DETAILS
A-814	MISC CURTAIN WALL DETAILS
A-815	TYPICAL FIN TUBE TRENCH SECTION DETAILS
A-816	VEST. #2 CURTAIN WALL DETAILS
A-817	TYPICAL SECTION DETAILS
A-818	TAPERED STEEL COLUMN DETAILS
A-820	TYPICAL STONE SECTION DETAILS
A-821	TYPICAL STONE SECTION DETAILS
A-822	EXTERIOR STONE CLADDING DETAILS
A-830	TYPICAL ROOF DETAILS
A-842	PLAN DETAILS
A-843	PLAN DETAILS
A-844	PLAN DETAILS
A-845	CLUBHOUSE GATE DETAILS
A-846	MILLWORK DETAILS
A-847	MISC DETAILS
A-865	TYPICAL CEILING DETAILS
A-866	CEILING DETAILS
A-881	SECURITY GATE DETAILS
A-882	ENTRANCE GATE
A-883	ENTRANCE GATE DETAILS
A-887	GUARD RAIL TYPES AND DETAILS
A-888	GUARD RAIL DETAILS
A-900	WALL PARTITION TYPES
A-901	WALL PARTITION TYPES
A-902	PARTITION DETAILS
A-930	DOOR SCHEDULE AND TYPES
A-940	CURTAIN WALL TYPES
A-941	LOUVER TYPES
A-950	ROOM FINISH/ EQUIPMENT SCHEDULE

NO.	DATE	ISSUED FOR	BY
1	08/22/16	ADDENDUM #2	GRIM

SEAL AND SIGNATURE

REGISTERED ARCHITECT · DAVID ... · 032404 · STATE OF NEW YORK
05/16/16

CONSULTANTS

ARCHITECT
GRIMSHAW
637 West 27th Street
New York NY10001
T +1 646 293 3600
F +1 646 293 3610

NYC Environmental Protection

NYC Parks

PROJECT
PUBLIC BUILDINGS DIVISION
Croton Water Treatment Plant
Above Grade Facilities - Package 4 - Phase B
3651 Jerome Avenue Bronx, NY 10467
Capital Project #: HED-CLUB

CLIENT
NEW YORK CITY DEPARTMENT OF DESIGN + CONSTRUCTION

STATUS	DATE	SCALE
ISSUED FOR BIDS	08/22/16	N/A

DRAWING TITLE
PHASE B DRAWING LIST- PAGE 1 OF 2

DRAWN	CHECKED	AUTHORIZED
MB	EJ	DB

© copyright GRIMSHAW Do not scale - All dimensions to be checked on site 22" x 34"

SHEET
CROB_G_001

STRUCTURAL

S-000	STRUCTURAL GENERAL NOTES
S-001	STRUCTURAL GENERAL NOTES
S-002	STRUCTURAL GENERAL NOTES
S-090	DPR CLUBHOUSE FOUNDATION PLAN -1
S-091	DPR CLUBHOUSE FOUNDATION PLAN -2
S-092	DPR CLUBHOUSE FOUNDATION PLAN -3
S-093	DPR CLUBHOUSE FOUNDATION PLAN -4
S-094	DPR CLUBHOUSE FOUNDATION PLAN -5
S-095	DPR CLUBHOUSE FOUNDATION PLAN -6
S-096	DPR CLUBHOUSE FOUNDATION PLAN -7
S-097	DPR CLUBHOUSE FOUNDATION PLAN -8
S-098	DPR CLUBHOUSE FOUNDATION PLAN -9
S-100	DPR CLUBHOUSE BASEMENT PLAN -1
S-101	DPR CLUBHOUSE BASEMENT PLAN -2
S-102	DPR CLUBHOUSE BASEMENT PLAN -3
S-103	DPR CLUBHOUSE BASEMENT PLAN -4
S-104	DPR CLUBHOUSE BASEMENT PLAN -5
S-105	DPR CLUBHOUSE BASEMENT PLAN -6
S-106	DPR CLUBHOUSE BASEMENT PLAN -7
S-107	DPR CLUBHOUSE BASEMENT PLAN -8
S-108	DPR CLUBHOUSE BASEMENT PLAN -9
S-110	DPR CLUBHOUSE MAIN FLOOR FRAMING PLAN -1
S-111	DPR CLUBHOUSE MAIN FLOOR FRAMING PLAN -2
S-112	DPR CLUBHOUSE MAIL FLOOR FRAMING PLAN -3
S-113	DPR CLUBHOUSE MAIN FLOOR FRAMING PLAN -4
S-114	DPR CLUBHOUSE MAIN FLOOR FRAMING PLAN -5
S-115	DPR CLUBHOUSE MAIN FLOOR FRAMING PLAN -6
S-116	DPR CLUBHOUSE MAIN FLOOR FRAMING PLAN -7
S-117	DPR CLUBHOUSE MAIN FLOOR FRAMING PLAN -8
S-118	DPR CLUBHOUSE MAIN FLOOR FRAMING PLAN -9
S-120	DPR CLUBHOUSE ROOF FRAMING PLAN -1
S-121	DPR CLUBHOUSE ROOF FRAMING PLAN -2
S-122	DPR CLUBHOUSE ROOF FRAMING PLAN -3
S-123	DPR CLUBHOUSE ROOF FRAMING PLAN -4
S-124	DPR CLUBHOUSE ROOF FRAMING PLAN -5
S-125	DPR CLUBHOUSE ROOF FRAMING PLAN -6
S-126	DPR CLUBHOUSE ROOF FRAMING PLAN -7
S-127	DPR CLUBHOUSE ROOF FRAMING PLAN -8
S-128	DPR CLUBHOUSE ROOF FRAMING PLAN -9
S-300	STRUCTURAL SECTION
S-301	STRUCTURAL SECTION
S-302	STRUCTURAL SECTION
S-303	STRUCTURAL SECTION
S-304	STRUCTURAL SECTION
S-305	STRUCTURAL SECTION
S-306	STRUCTURAL SECTION
S-307	STRUCTURAL SECTION
S-308	STRUCTURAL SECTION
S-309	STRUCTURAL SECTION
S-310	UNFOLDED WALL ELEVATION I
S-311	UNFOLDED WALL ELEVATION II
S-312	UNFOLDED WALL ELEVATION III
S-313	UNFOLDED WALL ELEVATION IV
S-314	UNFOLDED WALL ELEVATION V
S-320	WATER FEATURE PUMP ROOM SECTIONS AND PLAN
S-350	COLUMN SCHEDULE I
S-351	COLUMN SCHEDULE II
S-400	TYPICAL CONCRETE DETAILS
S-401	TYPICAL CONCRETE DETAILS
S-402	TYPICAL CONCRETE DETAILS
S-403	TYPICAL CONCRETE DETAILS
S-404	TYPICAL FOUNDATION DETAILS
S-405	TYPICAL FOUNDATION DETAILS
S-406	TYPICAL CONCRETE SLAB DETAILS
S-407	TYPICAL CONCRETE WALL DETAILS
S-408	TYPICAL CONCRETE WALL DETAILS
S-409	TYPICAL RETAINING WALL DETAILS
S-410	TYPICAL CONCRETE COLUMN DETAILS
S-420	CONCRETE SECTIONS AND DETAILS
S-421	CONCRETE SECTIONS AND DETAILS
S-423	CONCRETE SECTIONS AND DETAILS
S-500	TYPICAL CONCRETE SECTIONS AND DETAILS
S-501	TYPICAL STEEL BEAM DETAILS
S-502	TYPICAL STEEL COLUMN DETAILS
S-503	TYPICAL STEEL DECK DETAILS
S-504	TYPICAL STEEL DECK DETAILS
S-510	STEEL SECTIONS AND DETAILS
S-511	STEEL SECTIONS AND DETAILS
S-512	STEEL SECTIONS AND DETAILS
S-513	STEEL SECTIONS AND DETAILS
S-514	STEEL SECTIONS AND DETAILS
S-520	STAIR #1 SECTIONS AND DETAILS
S-600	TEE BOX PLAN AND ELEVATION
S-601	TEE BOX PLAN AND ELEVATION
S-602	TEE BOX PLAN AND ELEVATION
S-603	TEE BOX PLAN AND ELEVATION
S-700	TEE BOX SECTIONS AND DETAILS
S-701	TEE BOX SECTIONS AND DETAILS
S-702	PRECAST CONCRETE DETAILS
S-703	PRECAST CONCRETE DETAILS

MECHANICAL

EN-001	ENERGY ANALYSIS (1 of 4)
EN-002	ENERGY ANALYSIS (2 of 4)
EN-003	ENERGY ANALYSIS (3 of 4)
EN-004	ENERGY ANALYSIS (4 of 4)
M-001	MECHANICAL LEGEND
M-002	MECHANICAL NOTES
M-102	BASEMENT DUCT AND PIPING PLAN
M-103	BASEMENT DUCT AND PIPING PLAN
M-110	FIRST FLOOR DUCTWORK PLAN (1 of 4)
M-111	FIRST FLOOR DUCTWORK PLAN (2 of 4)
M-112	FIRST FLOOR DUCTWORK PLAN (3 of 4)
M-113	FIRST FLOOR DUCTWORK PLAN (4 of 4)
M-120	ROOF DUCTWORK PLAN
M-210	FIRST FLOOR PIPING PLAN (1 of 4)
M-211	FIRST FLOOR PIPING PLAN (2 of 4)
M-212	FIRST FLOOR PIPING PLAN (3 of 4)
M-213	FIRST FLOOR PIPING PLAN (4 of 4)
M-500	HVAC DETAILS (1 of 3)
M-501	HVAC DETAILS (2 of 3)
M-502	HVAC DETAILS (3 of 3)
M-600	HVAC SCHEDULE
M-601	HVAC SCHEDULE
M-700	DUAL TEMPERATURE RISER DIAGRAM
M-701	AIR FLOW RISER DIAGRAMS
M-702	FREE COOLING WATER RISER DIAGRAMS
M-800	CONTROLS DIAGRAMS
M-900	TEE BOX EQUIPMENT PLAN

ELECTRICAL

E-001	ELECTRICAL SYMBOL LIST
E-002	ELECTRICAL NOTES
E-102	BASEMENT POWER PLAN
E-103	BASEMENT POWER PLAN
E-108	BASEMENT POWER PLAN
E-110	1ST FLOOR POWER PLAN
E-111	1ST FLOOR POWER PLAN
E-112	1ST FLOOR POWER PLAN
E-113	1ST FLOOR POWER PLAN
E-114	1ST FLOOR POWER PLAN
E-115	1ST FLOOR POWER PLAN
E-120	ROOF POWER PLAN
E-202	BASEMENTLIGHTING PLAN
E-203	BASEMENTLIGHTING PLAN
E-204	BASEMENTLIGHTING PLAN
E-205	BASEMENTLIGHTING PLAN
E-206	BASEMENTLIGHTING PLAN
E-207	BASEMENTLIGHTING PLAN
E-208	BASEMENTLIGHTING PLAN
E-209	BASEMENTLIGHTING PLAN
E-210	1ST FLOOR LIGHTING PLAN
E-211	1ST FLOOR LIGHTING PLAN
E-212	1ST FLOOR LIGHTING PLAN
E-213	1ST FLOOR LIGHTING PLAN
E-214	1ST FLOOR LIGHTING PLAN
E-215	1ST FLOOR LIGHTING PLAN
E-216	1ST FLOOR LIGHTING PLAN
E-217	1ST FLOOR LIGHTING PLAN
E-218	1ST FLOOR LIGHTING PLAN
E-219	1ST FLOOR LIGHTING PLAN
E-220	ROOF LIGHTING PLAN
E-221	ROOF LIGHTING PLAN
E-222	ROOF LIGHTING PLAN
E-223	ROOF LIGHTING PLAN
E-224	ROOF LIGHTING PLAN
E-225	ROOF LIGHTING PLAN
E-226	ROOF LIGHTING PLAN
E-227	ROOF LIGHTING PLAN
E-228	ROOF LIGHTING PLAN
E-300	SITE POWER PLAN
E-320	SITE LIGHTING PLAN (1 of 3)
E-321	SITE LIGHTING PLAN (2 of 3)
E-322	SITE LIGHTING PLAN (3 of 3)
E-600	PANEL SCHEDULES
E-601	PANEL SCHEDULES
E-602	PANEL SCHEDULES
E-603	PANEL SCHEDULES
E-700	ONE LINE DIAGRAMS
E-800	LIGHTING SCHEDULE
E-801	'NOT USED'
E-802	'NOT USED'
E-803	'NOT USED'
E-804	'NOT USED'
E-805	'NOT USED'
E-806	'NOT USED'
E-807	'NOT USED'
E-808	'NOT USED'
E-809	'NOT USED'
E-810	'NOT USED'
E-811	'NOT USED'
E-812	'NOT USED'
E-813	'NOT USED'
E-814	'NOT USED'
E-815	'NOT USED'
E-816	'NOT USED'
E-817	'NOT USED'
FA-001	FIRE ALARM SYMBOLS & RISER DIAGRAM
FA-102	BASEMENT FIRE ALARM PLAN
FA-103	BASEMENT FIRE ALARM PLAN
FA-110	FIRST FLOOR FIRE ALARM PLAN (1 of 1)
FA-111	FIRST FLOOR FIRE ALARM PLAN (1 of 2)
FA-112	FIRST FLOOR FIRE ALARM PLAN (1 of 3)
FA-113	FIRST FLOOR FIRE ALARM PLAN (1 of 4)
FA-120	ROOF FIRE ALARM PLAN (1 of 2)

PLUMBING

P-001	PLUMBING SYMBOL LIST
P-100	BASEMENT PLUMBING PLAN (1 of 5)
P-101	BASEMENT PLUMBING PLAN (2 of 5)
P-102	BASEMENT PLUMBING PLAN (3 of 5)
PU-102	PLUMBING SYSTEMS - FOUNDATION PLAN
P-103	BASEMENT PLUMBING PLAN (4 of 5)
PU-103	PLUMBING SYSTEMS - FOUNDATION PLAN
P-108	BASEMENT PLUMBING PLAN (5 of 5)
PU-108	PLUMBING SYSTEMS - FOUNDATION PLAN
P-110	FIRST FLOOR PLUMBING PLAN (1 of 9)
P-111	FIRST FLOOR PLUMBING PLAN (2 of 9)
P-112	FIRST FLOOR PLUMBING PLAN (3 of 9)
P-113	FIRST FLOOR PLUMBING PLAN (4 of 9)
P-114	FIRST FLOOR PLUMBING PLAN (5 of 9)
P-115	FIRST FLOOR PLUMBING PLAN (6 of 9)
P-116	FIRST FLOOR PLUMBING PLAN (7 of 9)
P-117	FIRST FLOOR PLUMBING PLAN (8 of 9)
P-118	FIRST FLOOR PLUMBING PLAN (9 of 9)
P-120	ROOF PLUMBING PLAN (1 of 9)
P-121	ROOF PLUMBING PLAN (2 of 9)
P-122	ROOF PLUMBING PLAN (3 of 9)
P-123	ROOF PLUMBING PLAN (4 of 9)
P-124	ROOF PLUMBING PLAN (5 of 9)
P-125	ROOF PLUMBING PLAN (6 of 9)
P-126	ROOF PLUMBING PLAN (7 of 9)
P-127	ROOF PLUMBING PLAN (8 of 9)
P-128	ROOF PLUMBING PLAN (9 of 9)
P-400	PLUMBING SYSTEMS - DPR CH FLOOR PART. PLANS
P-500	PLUMBING DETAILS
P-501	PLUMBING DETAILS
P-502	PLUMBING DETAILS
P-600	PLUMBING SCHEDULE
P-700	PLUMBING RISER DIAGRAMS
P-701	PLUMBING TEE BOX RISER DIAGRAMS
P-702	PLUMBING TEE BOX RISER DIAGRAMS
SP-001	FIRE PROTECTION SYMBOLS, NOTES, & ABBREVIATIONS
SP-101	BASEMENT SPRINKLER PLAN (1 of 3)
SP-102	BASEMENT SPRINKLER PLAN (2 of 3)
SP-103	BASEMENT SPRINKLER PLAN (3 of 3)
SP-110	1ST FLOOR SPRINKLER PLAN (1 of 4)
SP-111	1ST FLOOR SPRINKLER PLAN (2 of 4)
SP-112	1ST FLOOR SPRINKLER PLAN (3 of 4)
SP-113	1ST FLOOR SPRINKLER PLAN (4 of 4)
SP-500	FIRE PROTECTION TYPICAL DETAILS
SP-700	CH RISER DIAGRAM

NO.	DATE	ISSUED FOR	BY
1	08/22/16	ADDENDUM #2	GRIM

SEAL AND SIGNATURE: REGISTERED ARCHITECT DAVID BRIGHT 032404 STATE OF NEW YORK 08/16/16

CONSULTANTS

ARCHITECT
GRIMSHAW
637 West 27th Street
New York NY10001
T +1 646 293 3600
F +1 646 293 3610

NYC Environmental Protection

NYC Parks

PROJECT
PUBLIC BUILDINGS DIVISION
Croton Water Treatment Plant
Above Grade Facilities - Package 4 - Phase B
3651 Jerome Avenue Bronx, NY 10467
Capital Project #: HED-CLUB

CLIENT: NEW YORK CITY DEPARTMENT OF DESIGN + CONSTRUCTION

STATUS: ISSUED FOR BIDS

DRAWING TITLE: PHASE B DRAWING LIST- PAGE 2 OF 2

DATE: 08/22/16 | SCALE: N/A

DRAWN: MM | CHECKED: EJ | AUTHORIZED: DB

© copyright GRIMSHAW Do not scale - All dimensions to be checked on site 22" x 34"

SHEET: CROB-G-002

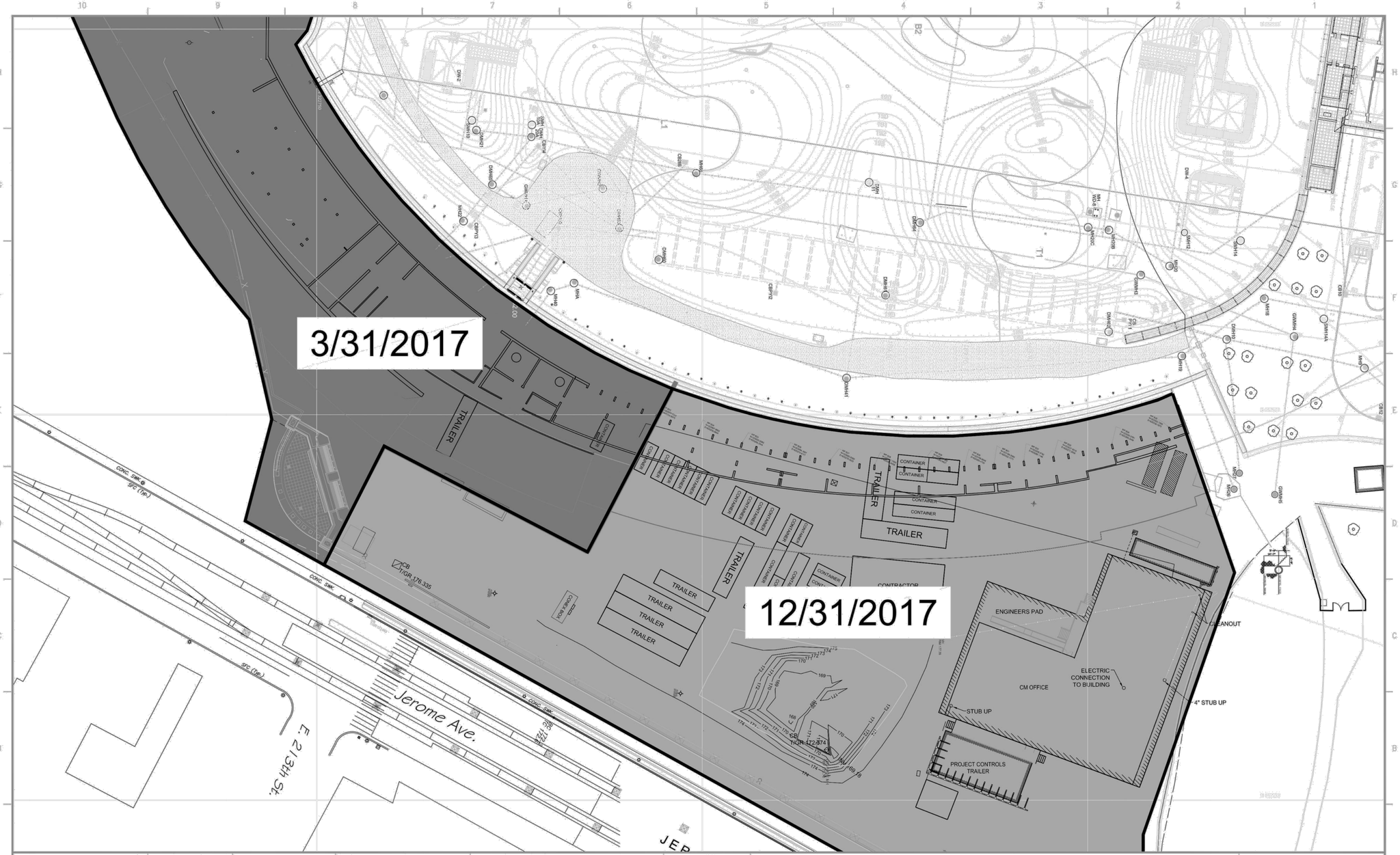

KEY PLAN

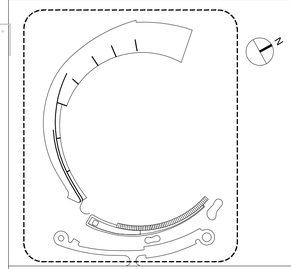

GENERAL NOTES

1. DRAWINGS ON THIS SHEET PREPARED ON 05/17/16 BY NYC DEP AND ARE INCLUDED FOR INFORMATION ONLY.
2. SEE G-030 & G-031 FOR ADDITIONAL INFORMATION REGARDING INTERDICTION LINE AND DEP TEMPORARY SECURITY FENCE.

DESIGNED B. FARRELLY
DRAWN T. DZIKI
SCALE: 1:20

URS MALCOLM PIRNIE

CITY OF NEW YORK
DEPARTMENT OF ENVIRONMENTAL PROTECTION
BUREAU OF ENGINEERING DESIGN & CONSTRUCTION
DIVISION WATERSHED FACILITIES DESIGN
WM-11 CROTON WATER TREATMENT PLANT

DEP DEMOBILIZATION PLAN

DATE: MAY 17, 2016
SHEET 1 OF 1
DWG. NO. DEP DEMO PLAN

NO.	DATE	ISSUED FOR	BY
1	08/22/16	ADDENDUM #2	GRIM

SEAL AND SIGNATURE: REGISTERED ARCHITECT DAVID GRIMSHAW 032404 STATE OF NEW YORK 05/16/16

CONSULTANTS

ARCHITECT
GRIMSHAW
637 West 27th Street
New York NY10001
T +1 646 293 3600
F +1 646 293 3610

NYC Environmental Protection
NYC Parks

PROJECT
PUBLIC BUILDINGS DIVISION
Croton Water Treatment Plant
Above Grade Facilities - Package 4 - Phase B
3651 Jerome Avenue Bronx, NY 10467
Capital Project #: HED-CLUB

CLIENT
NEW YORK CITY DEPARTMENT OF DESIGN + CONSTRUCTION

STATUS: ISSUED FOR BIDS
DRAWING TITLE: DEP DEMOBILIZATION PLAN
DATE: 08/22/16
SCALE: NTS
DRAWN: PK
CHECKED: EJ
AUTHORIZED: DB

© copyright GRIMSHAW Do not scale - All dimensions to be checked on site 22" x 34"

SHEET CROB_G_033

Reference	Manufacturer (Basis of Design)	Ref (Basis of Design)	Type	Lamp	Lamp Quantity	Output (lm)	watts	Color	Color Temp	Switched/Dimmed	Voltage
AD1	BeveLED (downlight 3021) - Or Approved Equal	3231A30-*-S-*-LRTA4-8424-C2-30KS-30-NC-*-DIML2 - Or Approved Equal	recessed downlight	LED	-	1625	24	white	3000	dim	120/277
AD2	BeveLED (downlight 3021) - Or Approved Equal	3231A30-*-S-LRTA4-8433-C2-30KS-20-NC-*-DIML2 - Or Approved Equal	recessed downlight	LED	-	1950	33	white	3000	dim	120/277
AD3	BeveLED (downlight 3021) - Or Approved Equal	3021-AC1-F-*-LRTD4-9024-C2-30KS-50-NC-* - Or Approved Equal	recessed downlight	LED	-	1490	24	white	3000	switch	120/277
AD4	BeveLED (downlight 3021) - Or Approved Equal	3021W-AC1-F-*-LRTD4-9016-C2-30KS-30-NC-* - Or Approved Equal	recessed downlight	LED	-	1200	16	white	3000	switch	120/277
AD5*	New Star - Or Approved Equal	NSP-R-1-L35-FP-UN-WH-X - Or Approved Equal	bulkhead	LED	1	2000	20	white	3500	switch	120/277
AD6	Delray Lighting (7601 1 32) - Or Approved Equal	7601 1 32 ** with custom diffuse lens - Or Approved Equal	downlight	CFL	1	2940	32	black	3500	switch	277
AD7	Delray Lighting - Or Approved Equal	7601 2 32 ** with custom diffuse lens - Or Approved Equal	downlight	CFL	2	6272	32	black	3500	switch	277
AD8	BeveLED (downlight 3231) - Or Approved Equal	3231A30W-*-S-*-LRTA4-8424-C2-30KS-30-NC-*-DIML2 - Or Approved Equal	recessed downlight	LED	-	1625	24	white	3000	dim	120/277
AF1	B-K Lighting (Yosemite Series) - Or Approved Equal	YO FL 35/70 ** 10 11 CV ** - Or Approved Equal	accent	CMH	1	-	70	black	3000	switch	277
AF2	B-K Lighting (Yosemite Series) - Or Approved Equal	YO FL 35/70 ** 10 11 CV ** - Or Approved Equal	accent	CMH	1	-	35	black	3000	switch	277
AF3	Ovalinear (style 159) - Or Approved Equal	M159 035G S 99 * V0 + AEGV20D0 - Or Approved Equal	uplight	CDM	1	-	35	black	3000	switch	TBD
AF4	Musco Lighting - Or Approved Equal	Light Structure Green - Or Approved Equal		MH	1	-	150	black		switch	277
AF5	B-K Lighting - Or Approved Equal	YO-WW-81-CUSTOM-13-11-CS - Or Approved Equal	accent downlight	CMH	1	-	20	black	4000	switch	277
AF6	Musco Lighting - Or Approved Equal	Light Structure Green - Or Approved Equal		MH	1	-	150	black		switch	120
AF7	Bega - Or Approved Equal	7705LEDK3 + 060 + 757 + 551 - Or Approved Equal	compact floodlight	LED	-	1723	30	black	3000	switch	TBD
AG1	Bega - Or Approved Equal	611-4453 ETC 140[A] ASC INGROUND UPLIGHTS FLUSH - Or Approved Equal	accessory		-						
AF8	Ovalinear (style 159) - Or Approved Equal	M159 035G X 99 * V0 + ACV-*-*-0 + AEBV20D0 - Or Approved Equal	uplight	CDM	2	-	35	black	3000	swicth	TBD
AF9	Ovalinear (style 159) - Or Approved Equal	M159 035G X 99 * V0 + ACS-*-*-0 + AEBV20D0 - Or Approved Equal	uplight	CDM	1	-	35	black	3000	switch	TBD
AG1	we-ef (611-4453 ETC140 flush vs. anti slip coating) -Or Approved Equal	611-4453 ETC 140[A] ASC INGROUND UPLIGHTS FLUSH - Or Approved Equal	inground uplight	CMH	1	6600	70	black	3000	switch	TBD
AG2	we-ef (611-3072ETC130 flush version) - Or Approved Equal	611-3072 ETC130 GB INGROUND UPLIGHTS FLUSH - Or Approved Equal	inground uplight	CMH	1	3000	39	black	3000	switch	TBD
AG3	we-ef (638-3031 CTY150) - Or Approved Equal	638-3031 CTY 150 - Or Approved Equal	path light	CFM	1	3200	42	black	3000	switch	TBD
AL1*	Zumtobel Slotlight - Or Approved Equal	SLDI-4-IT-1-N-5-830-XX-P-X-W-U-T-X - Or Approved Equal	TBAR CEILING	LED	-	4400	40	white	3000	switch	277
AL2	Ledalite (Sync) - Or Approved Equal	7406 T02 Q N * * 2 * W - Or Approved Equal	pendant	T5	2	-	32	white	3000	switch	277
AL3	Prudential Lighting (Snap) - Or Approved Equal	S1 1T8 * YGW* 277 SUR * * - Or Approved Equal	downlight	FL	1	-	17, 32	white	3000	switch	277
AL4	Litecontrol (Mod) - Or Approved Equal	R-D-44-1-*-T8-PBSS-CWM-*-*-*-*-277 - Or Approved Equal	downlight	FL	1	-	32	white	3000	switch	277
AL5	Prudential Lighting (Snap) - Or Approved Equal	S1 1T8 * YGW* 277 SUR * * - Or Approved Equal	downlight	FL	1	-	17	white	3000	switch	277
AL6	Prudential Lighting (Snap) - Or Approved Equal	S1 1T8 * YGW* 277 SUR * * - Or Approved Equal	downlight	FL	1	-	17	white	3000	switch	277
AL8	HE Williams (92) - Or Approved Equal	92-4-2-32-A-UNV - Or Approved Equal	downlight	FL	2	-	32		3000	switch	120/277
AL9*	Bega - Or Approved Equal	88602 - Or Approved Equal	ingrade linear (drive over)	FL	-	2000	28		3000	switch	
AM1	BeveLED (3231) - Or Approved Equal	3231A30-*-S-*-LRTA4-8433-C2-30KS-30-NC-*-DIML2 - Or Approved Equal	downlight	LED	-	1625	24	white	3000	dim	120/277
AP1	Kim Lighting (SAR - The Archetype) - Or Approved Equal	1SA-SAR2-150MHX-X-A-3X-HS-TL + LTRA16-6188-SA-BL - Or Approved Equal	parking pole	LED	-	-	150	black	4000	switch	277
AP2	Kim Lighting (SAR - The Archetype) - Or Approved Equal	1SA-SAR3-150MHX-X-A-3X-HS-TL + LTRA16-6188-SA-BL - Or Approved Equal	parking pole	LED	-	-	150	black	4000	switch	277
AP3	Kim Lighting - Or Approved Equal	ISA-SAR4-150MHX-X-A-3X-HS-TL with LTRA 16' Series Pole - Or Approved Equal	parking pole	LED	-	-	150	black	4000	switch	277
AR1	Kurtzon Lighting - Or Approved Equal	FP-F-3-2X2-4F17T8-UNV-WHT-A19 - Or Approved Equal	downlight	FL	4	-	17		3500	switch	UNV
AW1*	Bega - Or Approved Equal	22225 - Or Approved Equal	recessed wall	CFL	1	1200	18	black	3001	switch	277
AW2*	Bega - Or Approved Equal	22044 - Or Approved Equal	recessed wall	CFL	1	1200	18	black	3000	switch	277
AW3	LED Linear (XDO Light Hercules IP67) - Or Approved Equal	XOOLIGHT HERCULES W827/24"-*-T-IP68 - Or Approved Equal	linear	LED	-	1.048/m	10.7		3200	switch	TBD
AW5	Lumascape usa (LS333ANS - 2LED) - Or Approved Equal	LS333ANS-2LED 6H6-ME-13 - Or Approved Equal	pool light	LED	-		6		3000	switch	TBD

Notes:

1. Fixture with references marked with an asterix (*) have been updated as previous products specified have been discontinued.
2. Contractor to measure linear runs of all fixtures from architectural drawings to ensure correct run lengths are identified before procurement.
3. All fixture finishes to be confirmed by the architect.
4. All fixtures denoted with "EM" shall be provided the emergency battery packs.
5. Refer to architects drawings for all fixture locations and mounting heights.
6. Fixture type AL9 to be provided in 2 x 4ft lengths mounted end to end.

NO.	DATE	ISSUED FOR	BY
1	08/22/16	ADDENDUM #2	ARUP

SEAL AND SIGNATURE

CONSULTANTS

ARCHITECT
GRIMSHAW
637 West 27th Street
New York NY10001
T +1 646 293 3600
F +1 646 293 3610

Environmental Protection

NYC Parks

PROJECT
PUBLIC BUILDINGS DIVISION
Croton Water Treatment Plant
Above Grade Facilities - Package 4 - Phase B
3651 Jerome Avenue Bronx, NY 10467
Capital Project #: HED-CLUB

CLIENT
NEW YORK CITY DEPARTMENT OF DESIGN + CONSTRUCTION

STATUS
ISSUED FOR BIDS

DRAWING TITLE
LIGHTING SCHEDULE

DATE 08/22/16
SCALE N/A
DRAWN ARUP
CHECKED ARUP
AUTHORIZED ARUP

© copyright GRIMSHAW
Do not scale - All dimensions to be checked on site
22" x 34"

SHEET
CROB_E_800

FIGURE 1. Ornamental Walls, Water Features and Cascade Walls along Jerome Street

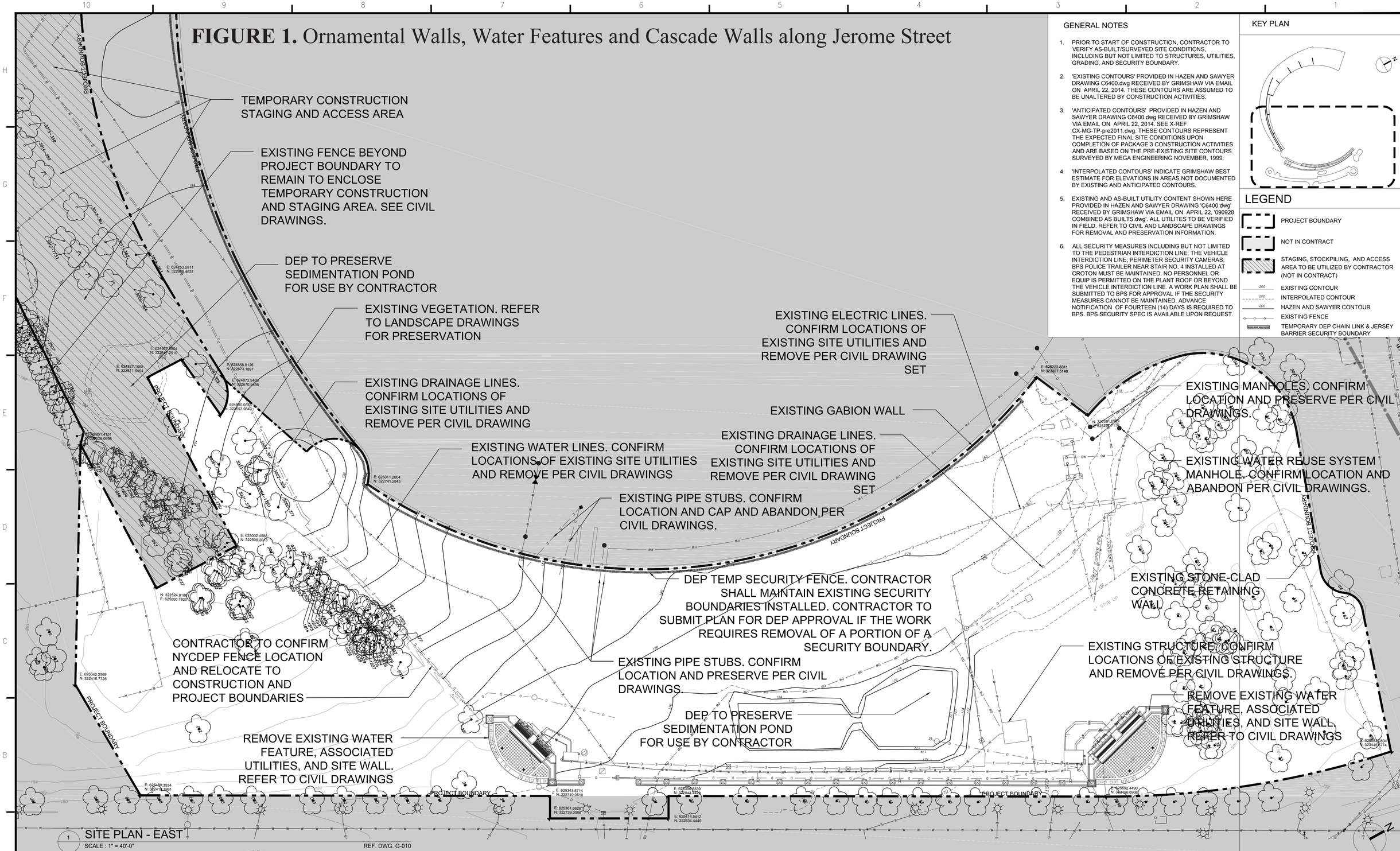

GENERAL NOTES

1. PRIOR TO START OF CONSTRUCTION, CONTRACTOR TO VERIFY AS-BUILT/SURVEYED SITE CONDITIONS, INCLUDING BUT NOT LIMITED TO STRUCTURES, UTILITIES, GRADING, AND SECURITY BOUNDARY.
2. 'EXISTING CONTOURS' PROVIDED IN HAZEN AND SAWYER DRAWING C6400.dwg RECEIVED BY GRIMSHAW VIA EMAIL ON APRIL 22, 2014. THESE CONTOURS ARE ASSUMED TO BE UNALTERED BY CONSTRUCTION ACTIVITIES.
3. 'ANTICIPATED CONTOURS' PROVIDED IN HAZEN AND SAWYER DRAWING C6400.dwg RECEIVED BY GRIMSHAW VIA EMAIL ON APRIL 22, 2014. SEE X-REF CX-MG-TP-pre2011.dwg. THESE CONTOURS REPRESENT THE EXPECTED FINAL SITE CONDITIONS UPON COMPLETION OF PACKAGE 3 CONSTRUCTION ACTIVITIES AND ARE BASED ON THE PRE-EXISTING SITE CONTOURS SURVEYED BY MEGA ENGINEERING NOVEMBER, 1999.
4. 'INTERPOLATED CONTOURS' INDICATE GRIMSHAW BEST ESTIMATE FOR ELEVATIONS IN AREAS NOT DOCUMENTED BY EXISTING AND ANTICIPATED CONTOURS.
5. EXISTING AND AS-BUILT UTILITY CONTENT SHOWN HERE PROVIDED IN HAZEN AND SAWYER DRAWING 'C6400.dwg' RECEIVED BY GRIMSHAW VIA EMAIL ON APRIL 22, '090928 COMBINED AS BUILTS.dwg'. ALL UTILITES TO BE VERIFIED IN FIELD. REFER TO CIVIL AND LANDSCAPE DRAWINGS FOR REMOVAL AND PRESERVATION INFORMATION.
6. ALL SECURITY MEASURES INCLUDING BUT NOT LIMITED TO THE PEDESTRIAN INTERDICTION LINE; THE VEHICLE INTERDICTION LINE; PERIMETER SECURITY CAMERAS; BPS POLICE TRAILER NEAR STAIR NO. 4 INSTALLED AT CROTON MUST BE MAINTAINED. NO PERSONNEL OR EQUIP IS PERMITTED ON THE PLANT ROOF OR BEYOND THE VEHICLE INTERDICTION LINE. A WORK PLAN SHALL BE SUBMITTED TO BPS FOR APPROVAL IF THE SECURITY MEASURES CANNOT BE MAINTAINED. ADVANCE NOTIFICATION OF FOURTEEN (14) DAYS IS REQUIRED TO BPS. BPS SECURITY SPEC IS AVAILABLE UPON REQUEST.

KEY PLAN

LEGEND

- PROJECT BOUNDARY
- NOT IN CONTRACT
- STAGING, STOCKPILING, AND ACCESS AREA TO BE UTILIZED BY CONTRACTOR (NOT IN CONTRACT)
- 200 EXISTING CONTOUR
- 200 INTERPOLATED CONTOUR
- 200 HAZEN AND SAWYER CONTOUR
- EXISTING FENCE
- TEMPORARY DEP CHAIN LINK & JERSEY BARRIER SECURITY BOUNDARY

NO.	DATE	ISSUED FOR	BY
A	XX/XXXX	GRIMSHAW - ABOVE GRADE	GRIM

SEAL AND SIGNATURE: REGISTERED ARCHITECT DAVID MASSEY 032404 STATE OF NEW YORK — 05/16/16

CONSULTANTS

ARCHITECT
GRIMSHAW
637 West 27th Street
New York NY10001
T +1 646 293 3600
F +1 646 293 3610

NYC Environmental Protection

NYC Parks

PROJECT
DIVISION OF STRUCTURES
Croton Water Treatment Plant
Above Grade Facilities - Package 4 - Phase B
3651 Jerome Avenue Bronx, NY 10467
Capital Project #: HED-CLUB

CLIENT
NEW YORK CITY DEPARTMENT OF DESIGN + CONSTRUCTION

STATUS: ISSUED FOR BIDS
DATE: 05/16/16
SCALE: 1" = 40'-0"
DRAWING TITLE: EXISTING CONDITIONS - EAST
DRAWN: MM
CHECKED: EJ
AUTHORIZED: DB

© copyright GRIMSHAW Do not scale - All dimensions to be checked on site

22" x 34"

SHEET: CROB_G_031

FIGURE 1. Ornamental Walls, Water Features and Cascade Walls along Jerome Street

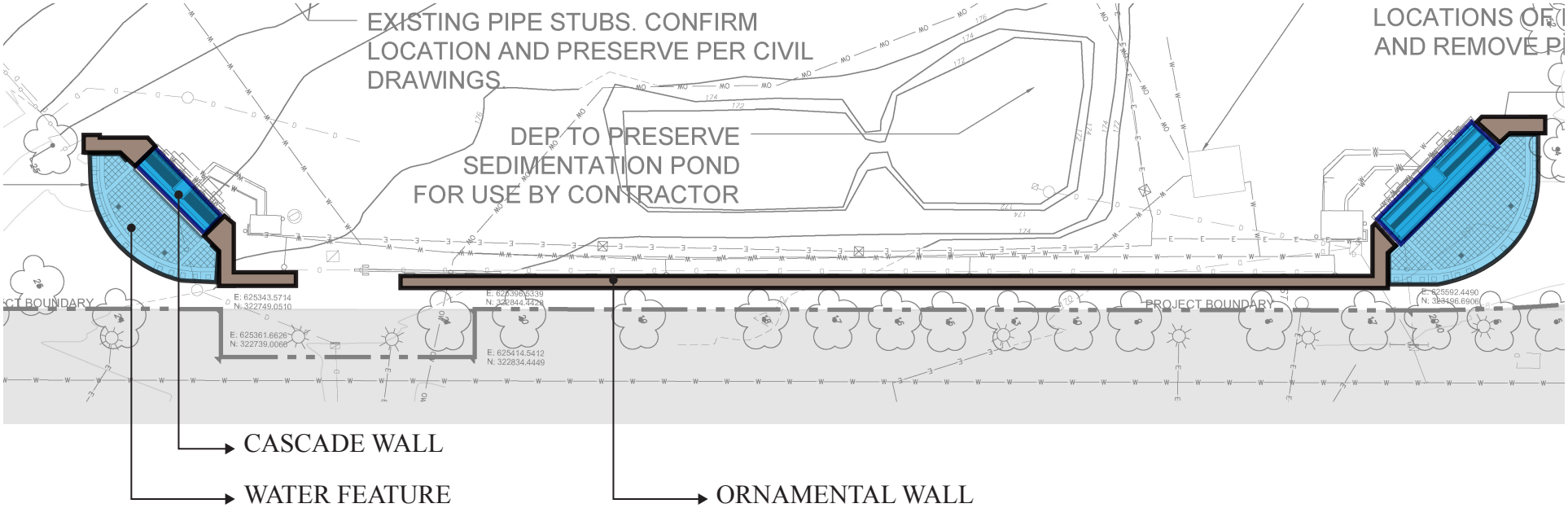

HED-CLUB FIGURE 2.

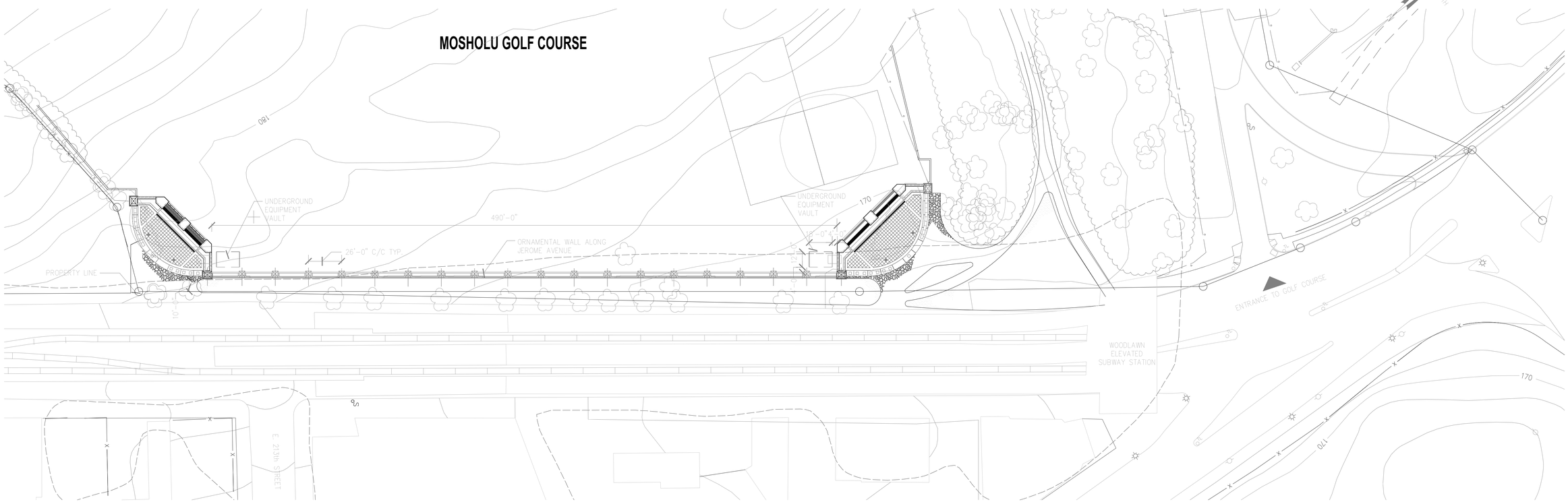

SCALE: 1" = 40'-0"

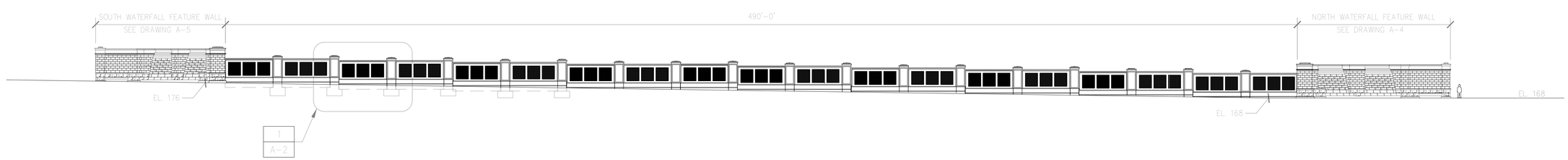

SCALE: 1" = 25'-0"

1"=25'-0" 0' 25' 50'

1"=40'-0" 40' 20' 0 40'

NO.	DATE	ISSUED FOR	BY
A	JULY 2004	CONFORMED DRAWINGS	ASN
0	FEB 2004	ADDENDUM NO. 2	ASN

WARNING
IT IS A VIOLATION OF SECTION 7209.2 OF THE NEW YORK STATE EDUCATION LAW FOR ANY PERSON, UNLESS ACTING UNDER THE DIRECTION OF A LICENSED PROFESSIONAL ENGINEER, TO ALTER IN ANY WAY PLANS, SPECIFICATIONS, PLATS OR REPORTS TO WHICH THE SEAL OF A PROFESSIONAL ENGINEER HAS BEEN APPLIED. IF AN ITEM BEARING THE SEAL OF A PROFESSIONAL ENGINEER IS ALTERED, THE ALTERING ENGINEER SHALL AFFIX TO THE ITEM HIS SEAL AND THE NOTATION "ALTERED BY" FOLLOWED BY HIS SIGNATURE, THE DATE, AND A SPECIFIC DESCRIPTION OF THE ALTERATION.

DESIGNED	AS
DRAWN	VYT
CHECKED	JAB
SECT.CHIEF	HRW
PROJ.ENGR.	ASN

SCALE AS SHOWN

STATE OF NEW YORK 30TH JANUARY 1978 PROFESSIONAL ENGINEER

M&E Metcalf & Eddy of New York, Inc.
A JOINT VENTURE
HAZEN AND SAWYER
Environmental Engineers & Scientists

APPROVED FOR THE CITY OF NEW YORK
ORIGINAL ISSUE SIGNED BY
SWAPAN GANGOPADHYAY P.E.
EXECUTIVE PROJECT MANAGER
PAUL D. SMITH P.E.
CHIEF, DIVISION OF WATERSHED FACILITIES DESIGN

NEW YORK CITY DEPARTMENT OF ENVIRONMENTAL PROTECTION

CITY OF NEW YORK
DEPARTMENT OF ENVIRONMENTAL PROTECTION
BUREAU OF ENVIRONMENTAL ENGINEERING
DIVISION OF WATERSHED FACILITIES DESIGN
WM-11 CROTON WATER TREATMENT PLANT

CONTRACT CRO-311
SITE PREPARATION
ORNAMENTAL WALL –
OVERALL PLAN AND ELEVATION

DATE FEBRUARY 2004
SHEET 47 OF 98
DWG. NO. A-1

PLOT DATE
A-1.DWG 12/11/2007 9:00:40 AM

HED-CLUB FIGURE 2.

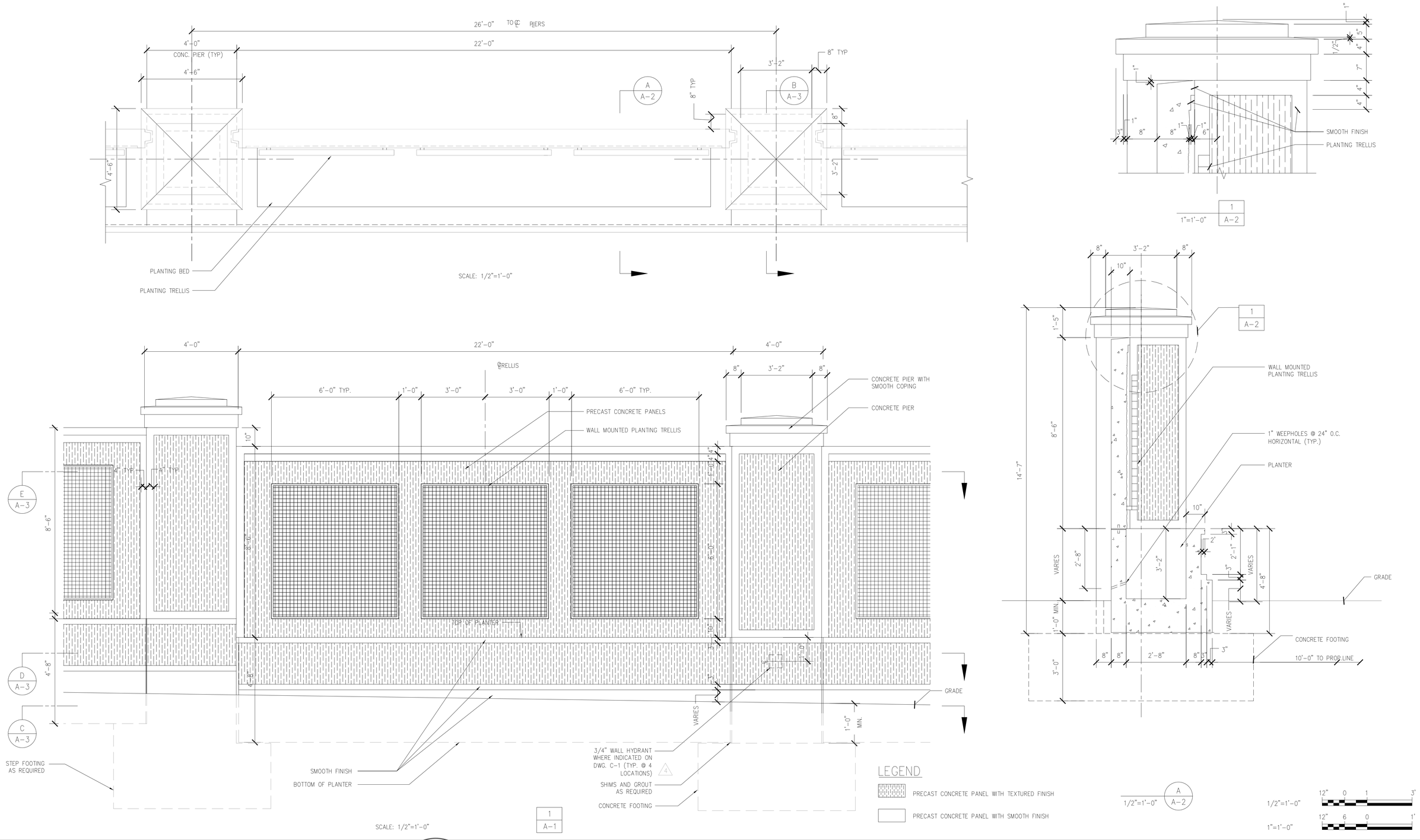

NO.	DATE	ISSUED FOR	BY
A	JULY 2004	CONFORMED DRAWINGS	ASN
4	APRIL 2004	ADDENDUM NO. 4	ASN
0	FEB. 2004	ADDENDUM NO. 2	ASN

CADD DATE

WARNING

IT IS A VIOLATION OF SECTION 7209.2 OF THE NEW YORK STATE EDUCATION LAW FOR ANY PERSON, UNLESS ACTING UNDER THE DIRECTION OF A LICENSED PROFESSIONAL ENGINEER, TO ALTER IN ANY WAY PLANS, SPECIFICATIONS, PLATS OR REPORTS TO WHICH THE SEAL OF A PROFESSIONAL ENGINEER HAS BEEN APPLIED. IF AN ITEM BEARING THE SEAL OF A PROFESSIONAL ENGINEER IS ALTERED, THE ALTERING ENGINEER SHALL AFFIX TO THE ITEM HIS SEAL AND THE NOTATION "ALTERED BY" FOLLOWED BY HIS SIGNATURE, THE DATE, AND A SPECIFIC DESCRIPTION OF THE ALTERATION.

DESIGNED AS
DRAWN VYT
CHECKED JAB
SECT.CHIEF HRW
PROJ.ENGR. ASN

SCALE AS SHOWN

STATE OF NEW YORK · ALAN STUART NATTER · 056707 · LICENSED PROFESSIONAL ENGINEER

M&E Metcalf & Eddy of New York, Inc.
A JOINT VENTURE
HAZEN AND SAWYER
Environmental Engineers & Scientists

APPROVED FOR THE CITY OF NEW YORK
ORIGINAL ISSUE SIGNED BY
SWAPAN GANGOPADHYAY P.E.
EXECUTIVE PROJECT MANAGER
PAUL D. SMITH P.E.
CHIEF, DIVISION OF WATERSHED FACILITIES DESIGN

NEW YORK CITY DEPARTMENT OF ENVIRONMENTAL PROTECTION · DEP

CITY OF NEW YORK
DEPARTMENT OF ENVIRONMENTAL PROTECTION
BUREAU OF ENVIRONMENTAL ENGINEERING
DIVISION OF WATERSHED FACILITIES DESIGN
WM-11 CROTON WATER TREATMENT PLANT

CONTRACT CRO-311
SITE PREPARATION
ORNAMENTAL WALL
PLANTER WALL –
TOP PLAN, ELEVATION, SECTION & DETAIL

DATE FEBRUARY 2004
SHEET 48 OF 98
DWG. NO. A-2

PLOT DATE

A-2.DWG 12/11/2007 9:02:29 AM

HED-CLUB FIGURE 2.

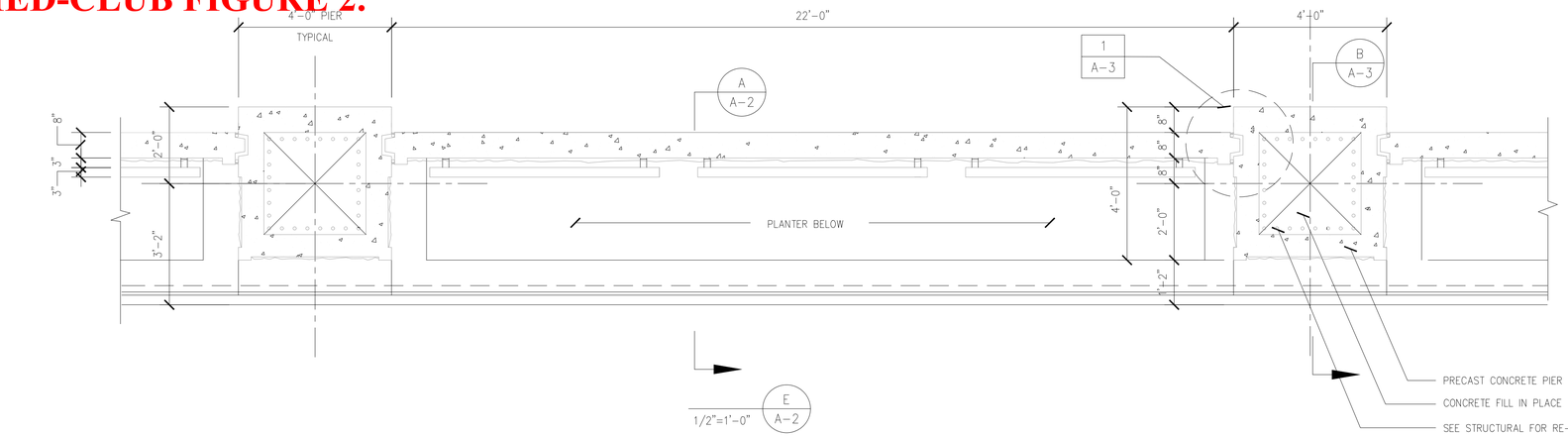

E
A-2
1/2"=1'-0"

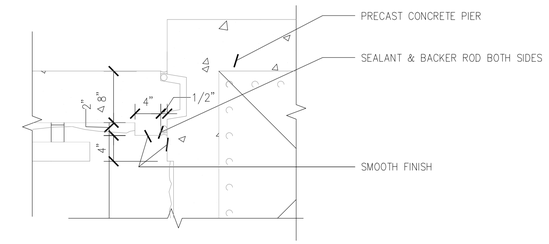

1
A-3
1"=1'-0"

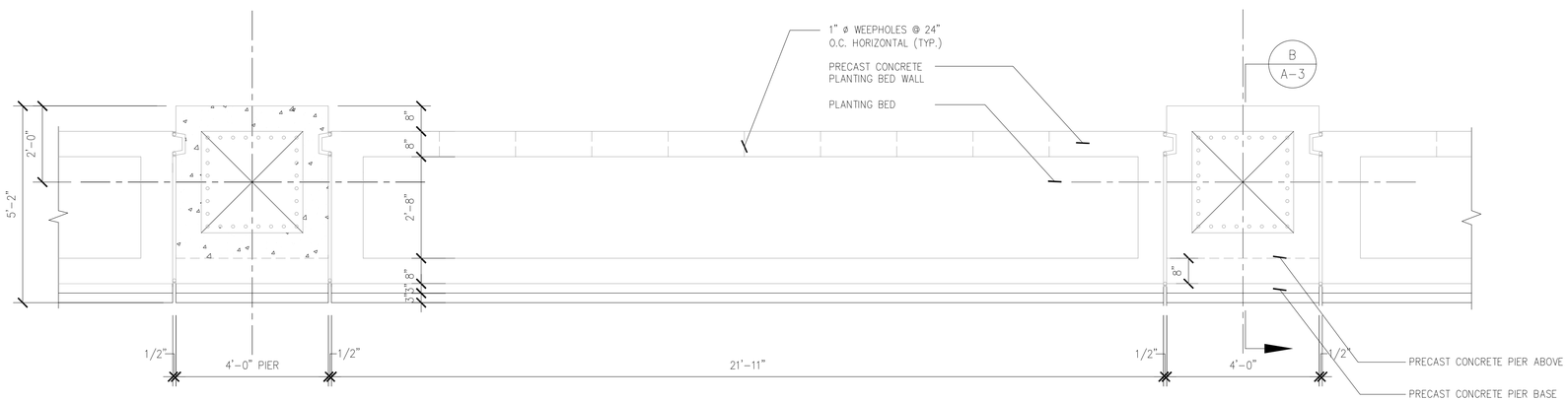

D
A-2
1/2"=1'-0"

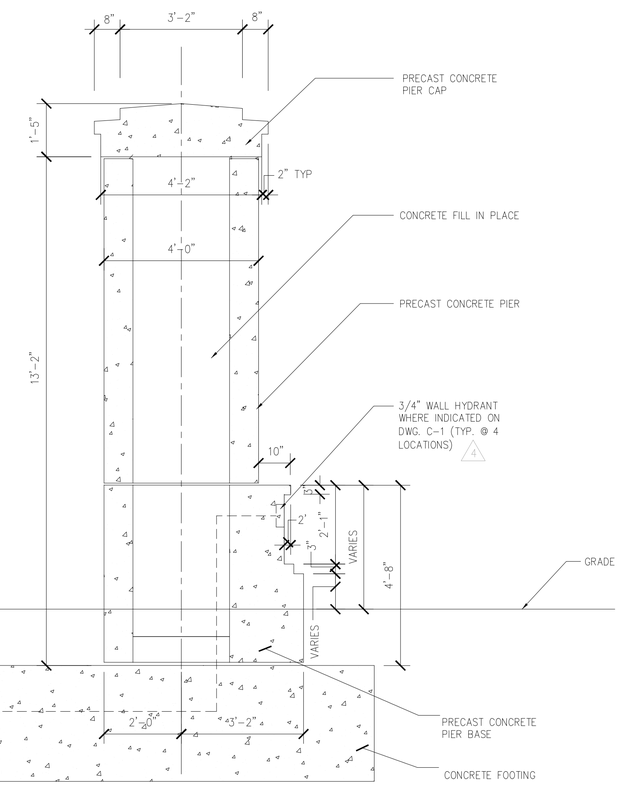

B
A-3
1/2"=1'-0"

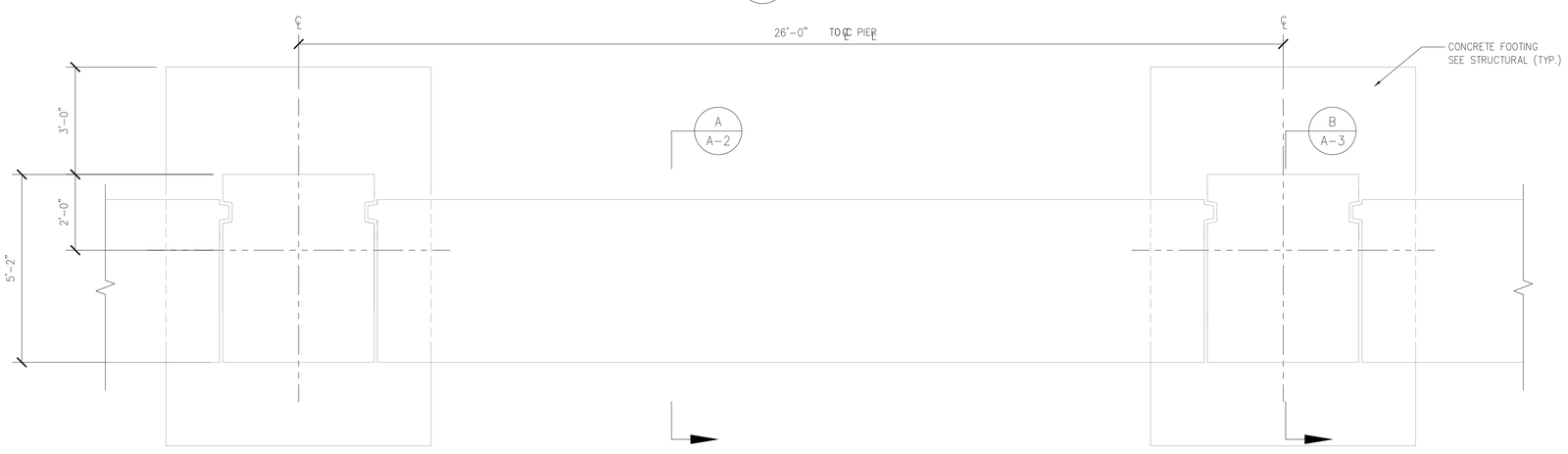

C
A-2
1/2"=1'-0"

1"=1'-0" 12" 6 0 1'

1/2"=1'-0" 12" 0 1 3'

NO.	DATE	ISSUED FOR	BY
A	JULY 2004	CONFORMED DRAWINGS	ASN
4	APRIL 2004	ADDENDUM NO. 4	ASN
0	FEB 2004	ADDENDUM NO. 2	ASN

CADD DATE

WARNING
IT IS A VIOLATION OF SECTION 7209.2 OF THE NEW YORK STATE EDUCATION LAW FOR ANY PERSON, UNLESS ACTING UNDER THE DIRECTION OF A LICENSED PROFESSIONAL ENGINEER, TO ALTER IN ANY WAY PLANS, SPECIFICATIONS, PLATS OR REPORTS TO WHICH THE SEAL OF A PROFESSIONAL ENGINEER HAS BEEN APPLIED. IF AN ITEM BEARING THE SEAL OF A PROFESSIONAL ENGINEER IS ALTERED, THE ALTERING ENGINEER SHALL AFFIX TO THE ITEM HIS SEAL AND THE NOTATION "ALTERED BY" FOLLOWED BY HIS SIGNATURE, THE DATE, AND A SPECIFIC DESCRIPTION OF THE ALTERATION.

DESIGNED AS
DRAWN VYT
CHECKED JAB
SECT.CHIEF HRW
PROJ.ENGR. ASN

SCALE
AS SHOWN

STATE OF NEW YORK · ALAN STUART WATER · 056700 · LICENSED PROFESSIONAL ENGINEER

Metcalf & Eddy of New York, Inc.
A JOINT VENTURE
HAZEN AND SAWYER
Environmental Engineers & Scientists

APPROVED FOR THE CITY OF NEW YORK
ORIGINAL ISSUE SIGNED BY
SWAPAN GANGOPADHYAY P.E.
EXECUTIVE PROJECT MANAGER
PAUL D. SMITH P.E.
CHIEF, DIVISION OF WATERSHED FACILITIES DESIGN

NEW YORK CITY DEPARTMENT OF ENVIRONMENTAL PROTECTION

CITY OF NEW YORK
DEPARTMENT OF ENVIRONMENTAL PROTECTION
BUREAU OF ENVIRONMENTAL ENGINEERING
DIVISION OF WATERSHED FACILITIES DESIGN
WM-11 CROTON WATER TREATMENT PLANT

CONTRACT CRO-311
SITE PREPARATION
ORNAMENTAL WALL
PLANTER WALL
SECTIONAL PLANS, SECTION & DETAIL

DATE FEBRUARY 2004
SHEET 49 OF 98
DWG. NO. A-3

PLOT DATE
a-3.DWG 12/11/2007 9:02:58 AM

HED-CLUB FIGURE 2.

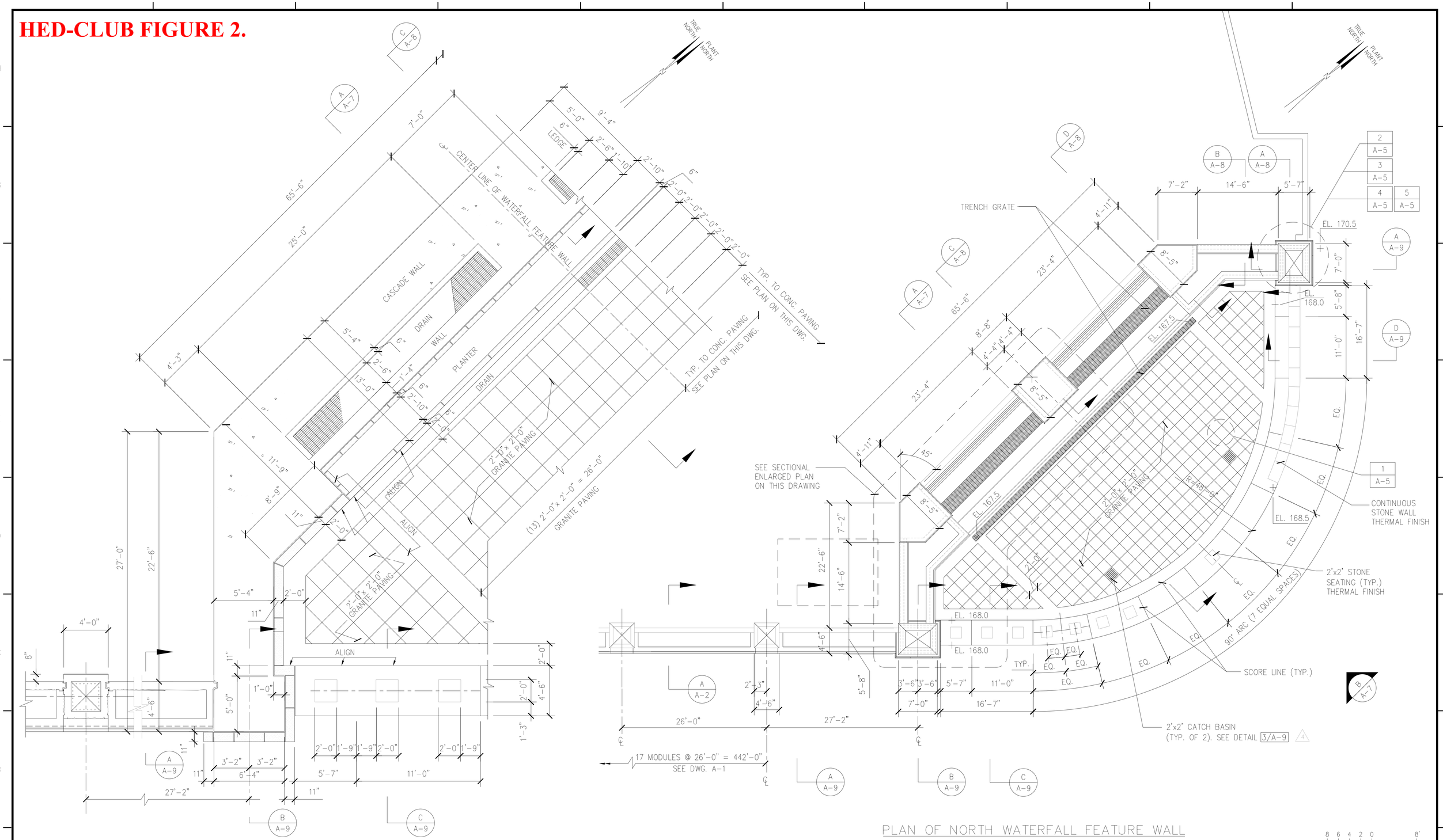

SECTIONAL PLAN OF NORTH WATERFALL FEATURE WALL @ EL.+0'-0" (A/A-7)

SCALE: 1/4"=1'-0"

PLAN OF NORTH WATERFALL FEATURE WALL

SCALE: 1/8"=1'-0"

1/8"=1'-0" 8 6 4 2 0 8'

1/4"=1'-0" 1 0 1 2 3 7'

NO.	DATE	ISSUED FOR	BY
A	JULY 2004	CONFORMED DRAWINGS	ASN
4	APRIL 2004	ADDENDUM NO. 4	ASN
0	FEB 2004	ADDENDUM NO. 2	ASN

WARNING

IT IS A VIOLATION OF SECTION 7209.2 OF THE NEW YORK STATE EDUCATION LAW FOR ANY PERSON, UNLESS ACTING UNDER THE DIRECTION OF A LICENSED PROFESSIONAL ENGINEER, TO ALTER IN ANY WAY PLANS, SPECIFICATIONS, PLATS OR REPORTS TO WHICH THE SEAL OF A PROFESSIONAL ENGINEER HAS BEEN APPLIED. IF AN ITEM BEARING THE SEAL OF A PROFESSIONAL ENGINEER IS ALTERED, THE ALTERING ENGINEER SHALL AFFIX TO THE ITEM HIS SEAL AND THE NOTATION "ALTERED BY" FOLLOWED BY HIS SIGNATURE, THE DATE, AND A SPECIFIC DESCRIPTION OF THE ALTERATION.

DESIGNED AS
DRAWN VYT
CHECKED JAB
SECT.CHIEF HRW
PROJ.ENGR. ASN

SCALE AS SHOWN

STATE OF NEW YORK · ALAN STUART NATER · LICENSED PROFESSIONAL ENGINEER · 056707

M&E Metcalf & Eddy of New York, Inc.
A JOINT VENTURE
HAZEN AND SAWYER
Environmental Engineers & Scientists

APPROVED FOR THE CITY OF NEW YORK
ORIGINAL ISSUE SIGNED BY
SWAPAN GANGOPADHYAY P.E.
EXECUTIVE PROJECT MANAGER
PAUL D. SMITH P.E.
CHIEF, DIVISION OF WATERSHED FACILITIES DESIGN

NEW YORK CITY DEPARTMENT OF ENVIRONMENTAL PROTECTION · DEP

CITY OF NEW YORK
DEPARTMENT OF ENVIRONMENTAL PROTECTION
BUREAU OF ENVIRONMENTAL ENGINEERING
DIVISION OF WATERSHED FACILITIES DESIGN
WM-11 CROTON WATER TREATMENT PLANT

ORNAMENTAL WALL
NORTH WATERFALL FEATURE –
PLAN & SECTIONAL PLAN

DATE
SHEET 50 OF
DWG. NO. A-4

PLOT DATE

A-4.DWG 12/11/2007 9:03:35 AM

HED-CLUB FIGURE 2.

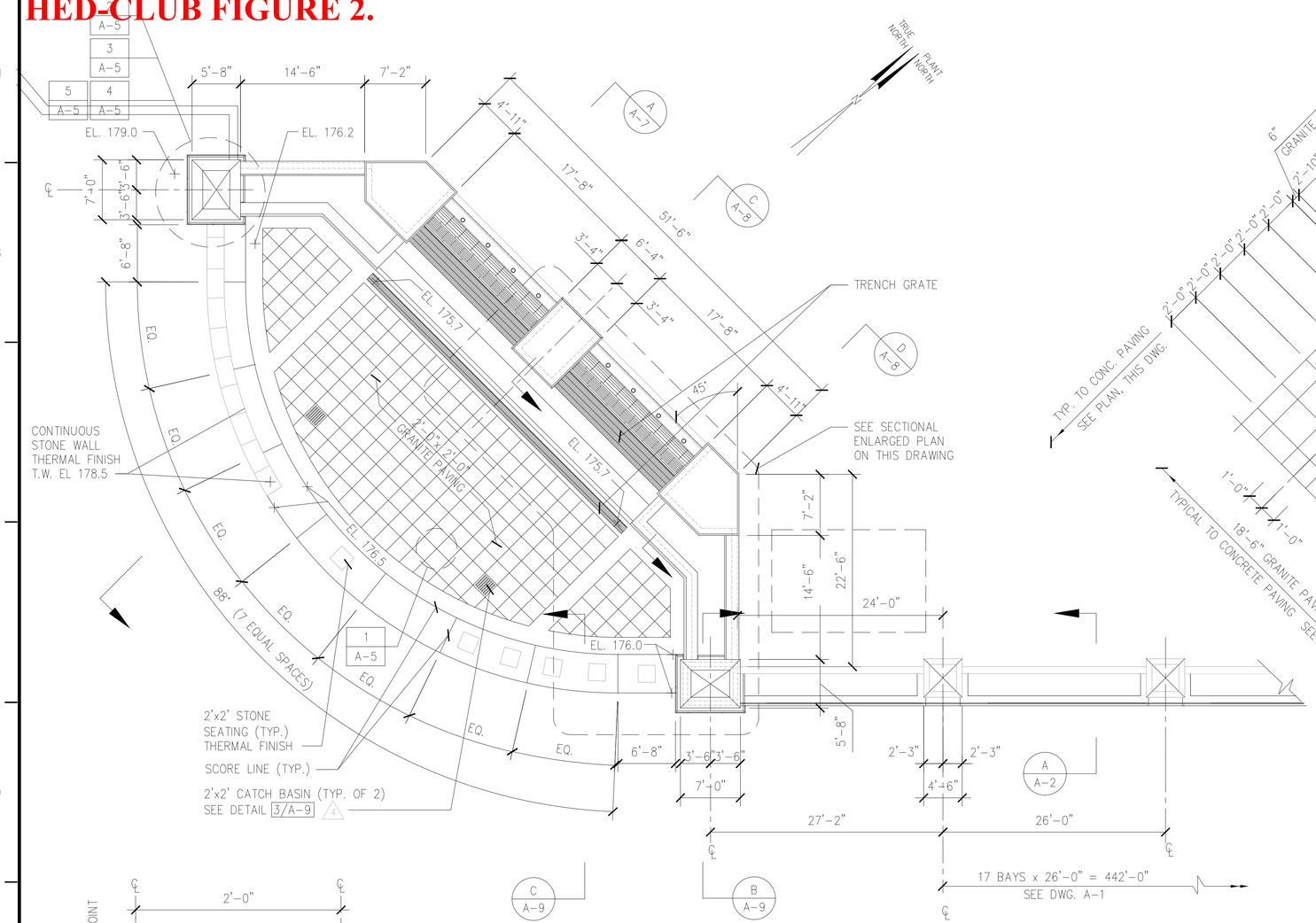

PLAN OF SOUTH WATERFALL FEATURE WALL

SCALE: 1/8"=1'-0"

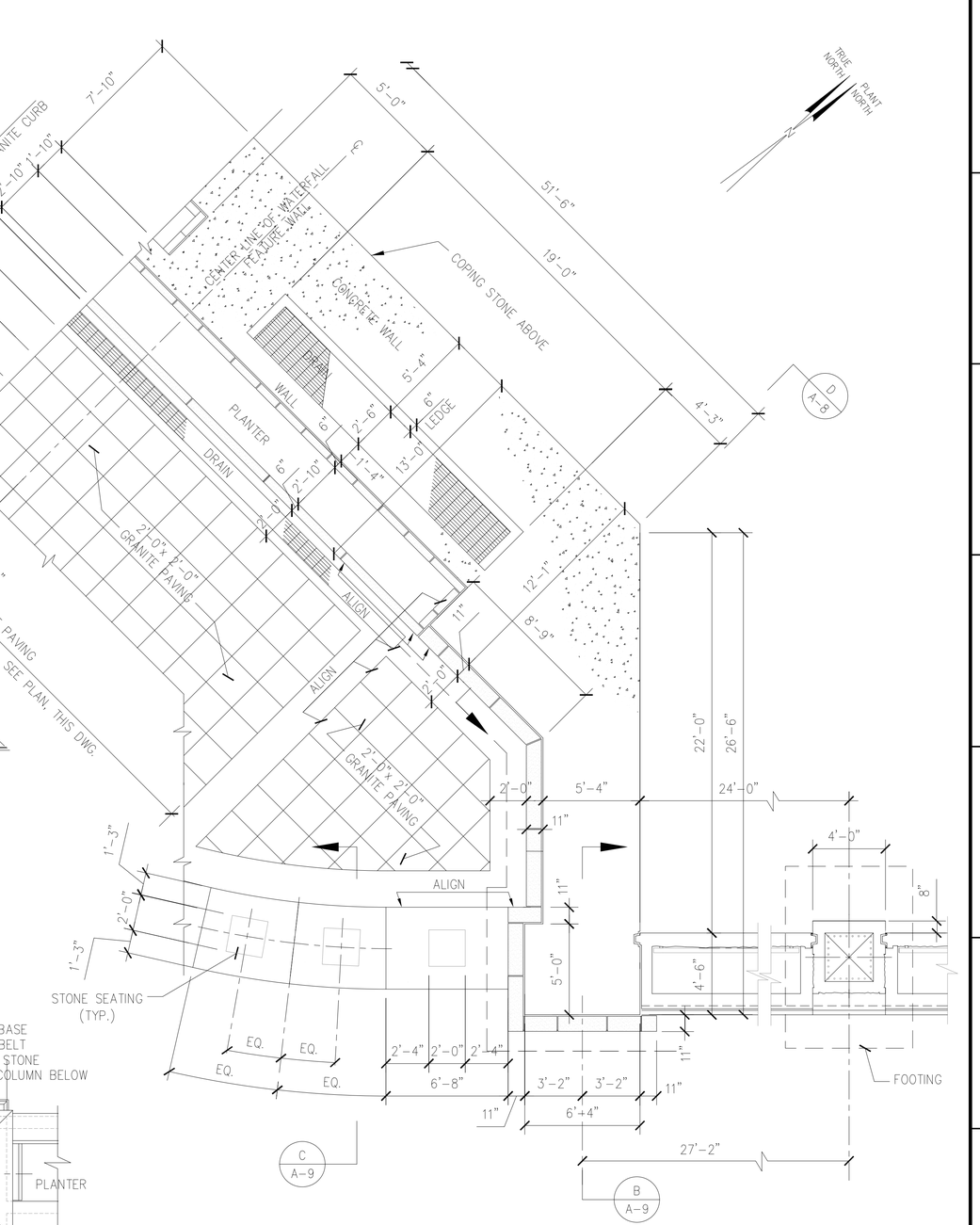

SECTIONAL PLAN OF SOUTH WATERFALL FEATURE WALL @ EL.+0'-0"

SCALE: 1/4"=1'-0"

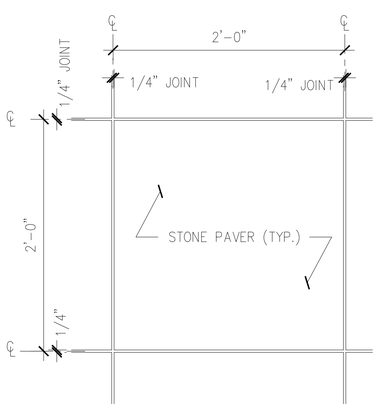

1 1/2"=1'-0" | 1 A-5

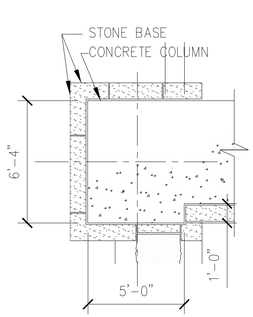

DETAIL @ EL. 0'-0" | 2 A-5

SCALE: 1/4"=1'-0"

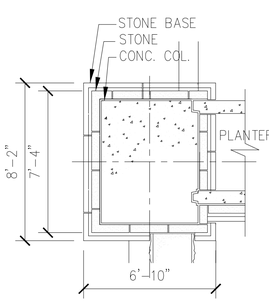

DETAIL @ EL. +3'-2" | 3 A-5

SCALE: 1/4"=1'-0"

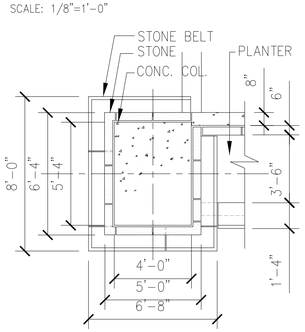

DETAIL @ EL. +5'-7" | 4 A-5

SCALE: 1/4"=1'-0"

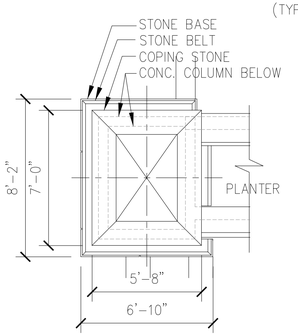

DETAIL @ EL. 16'-0" | 5 A-5

SCALE: 1/4"=1'-0"

1/8"=1'-0"
1/4"=1'-0"
1-1/2"=1'-0"

NO.	DATE	ISSUED FOR	BY
A	JULY 2004	CONFORMED DRAWINGS	ASN
4	APRIL 2004	ADDENDUM NO. 4	ASN
0	FEB 2004	ADDENDUM NO. 2	ASN

CADD DATE

WARNING: IT IS A VIOLATION OF SECTION 7209.2 OF THE NEW YORK STATE EDUCATION LAW FOR ANY PERSON, UNLESS ACTING UNDER THE DIRECTION OF A LICENSED PROFESSIONAL ENGINEER, TO ALTER IN ANY WAY PLANS, SPECIFICATIONS, PLATS OR REPORTS TO WHICH THE SEAL OF A PROFESSIONAL ENGINEER HAS BEEN APPLIED. IF AN ITEM BEARING THE SEAL OF A PROFESSIONAL ENGINEER IS ALTERED, THE ALTERING ENGINEER SHALL AFFIX TO THE ITEM HIS SEAL AND THE NOTATION "ALTERED BY" FOLLOWED BY HIS SIGNATURE, THE DATE, AND A SPECIFIC DESCRIPTION OF THE ALTERATION.

DESIGNED AS
DRAWN VYT
CHECKED JAB
SECT.CHIEF HRW
PROJ.ENGR. ASN

SCALE: AS SHOWN

STATE OF NEW YORK — ALAN STUART METTS — LICENSED PROFESSIONAL ENGINEER

M&E Metcalf & Eddy of New York, Inc.
A JOINT VENTURE
HAZEN AND SAWYER
Environmental Engineers & Scientists

APPROVED FOR THE CITY OF NEW YORK
ORIGINAL ISSUE SIGNED BY
SWAPAN GANGOPADHYAY P.E.
EXECUTIVE PROJECT MANAGER
PAUL D. SMITH P.E.
CHIEF, DIVISION OF WATERSHED FACILITIES DESIGN

NEW YORK CITY DEPARTMENT OF ENVIRONMENTAL PROTECTION — DEP

CITY OF NEW YORK
DEPARTMENT OF ENVIRONMENTAL PROTECTION
BUREAU OF ENVIRONMENTAL ENGINEERING
DIVISION OF WATERSHED FACILITIES DESIGN
WM-11 CROTON WATER TREATMENT PLANT

ORNAMENTAL WALL
SOUTH WATERFALL FEATURE –
PLAN, SECTIONAL PLAN & DETAIL

DATE
SHEET 51 OF
DWG. NO. A-5

PLOT DATE
A-S.DWG 12/11/2007 9:04:08 AM

HED-CLUB FIGURE 2.

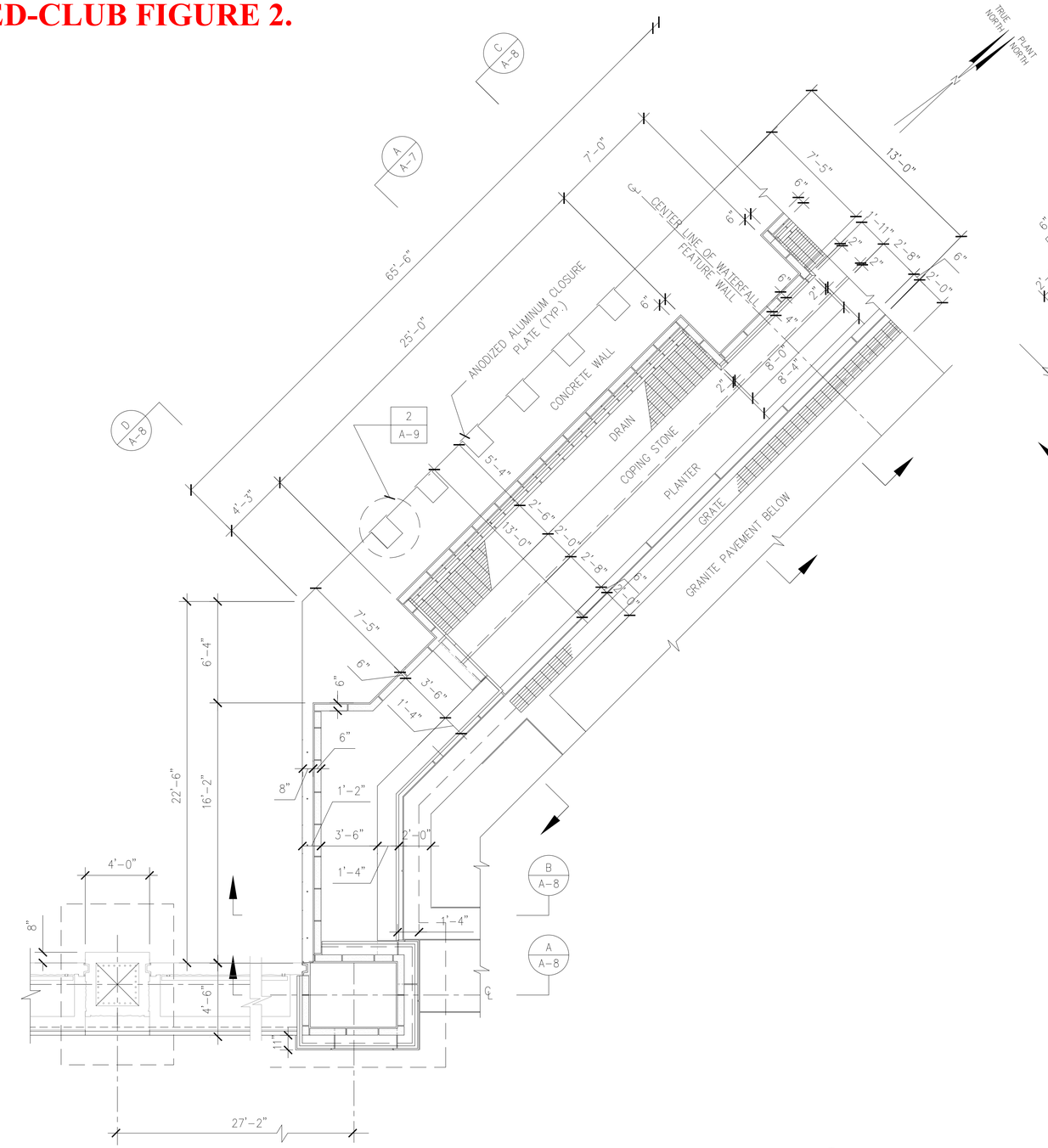

SECTIONAL PLAN OF NORTH WATERFALL FEATURE WALL @ EL.+ 5'-7" (A / A-7)

SCALE: 1/4"=1'-0"

NOTE:

NORTH WATERFALL FEATURE WALL SHOWN
SOUTH WATERFALL FEATURE WALL SIMILAR

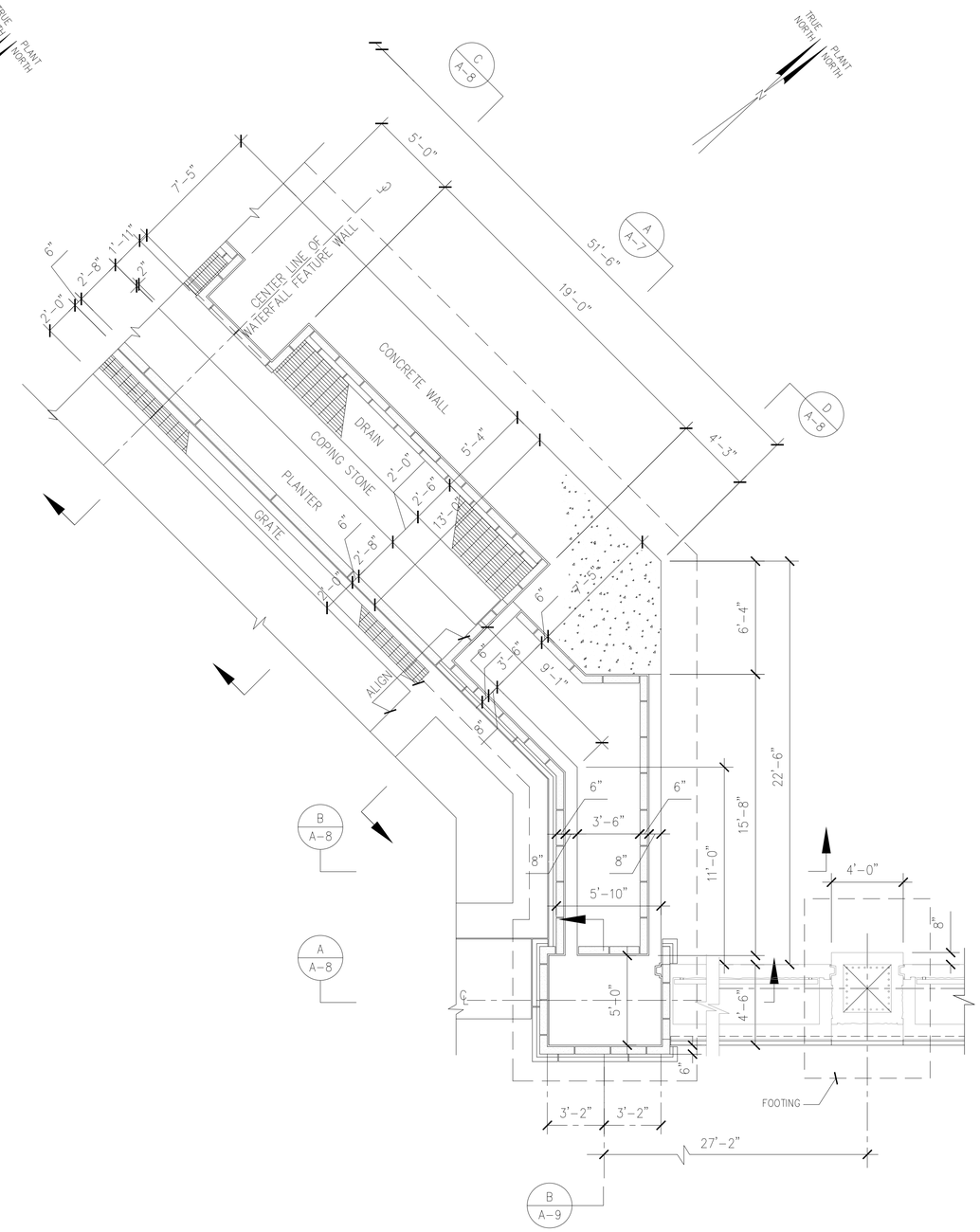

SECTIONAL PLAN OF SOUTH WATERFALL FEATURE WALL @ EL.+3'-2" (B / A-7)

SCALE: 1/4"=1'-0"

NOTE:

SOUTH WATERFALL FEATURE WALL SHOWN
NORTH WATERFALL FEATURE WALL SIMILAR

1/4"=1'-0" 1 0 1 2 3 7'

NO.	DATE	ISSUED FOR	BY
A	JULY 2004	CONFORMED DRAWINGS	ASN
0	FEB 2004	ADDENDUM NO. 2	ASN

WARNING
IT IS A VIOLATION OF SECTION 7209.2 OF THE NEW YORK STATE EDUCATION LAW FOR ANY PERSON, UNLESS ACTING UNDER THE DIRECTION OF A LICENSED PROFESSIONAL ENGINEER, TO ALTER IN ANY WAY PLANS, SPECIFICATIONS, PLATS OR REPORTS TO WHICH THE SEAL OF A PROFESSIONAL ENGINEER HAS BEEN APPLIED. IF AN ITEM BEARING THE SEAL OF A PROFESSIONAL ENGINEER IS ALTERED, THE ALTERING ENGINEER SHALL AFFIX TO THE ITEM HIS SEAL AND THE NOTATION "ALTERED BY" FOLLOWED BY HIS SIGNATURE, THE DATE, AND A SPECIFIC DESCRIPTION OF THE ALTERATION.

DESIGNED AS
DRAWN TY
CHECKED JAB
SECT.CHIEF HRW
PROJ.ENGR. ASN

SCALE: AS SHOWN

STATE OF NEW YORK — ALAN STUART NITTER — LICENSED PROFESSIONAL ENGINEER — 066707

M&E Metcalf & Eddy of New York, Inc.
A JOINT VENTURE
HAZEN AND SAWYER
Environmental Engineers & Scientists

APPROVED FOR THE CITY OF NEW YORK
ORIGINAL ISSUE SIGNED BY
SWAPAN GANGOPADHYAY P.E.
EXECUTIVE PROJECT MANAGER
PAUL D. SMITH P.E.
CHIEF, DIVISION OF WATERSHED FACILITIES DESIGN

NEW YORK CITY DEPARTMENT OF ENVIRONMENTAL PROTECTION

CITY OF NEW YORK
DEPARTMENT OF ENVIRONMENTAL PROTECTION
BUREAU OF ENVIRONMENTAL ENGINEERING
DIVISION OF WATERSHED FACILITIES DESIGN
WM-11 CROTON WATER TREATMENT PLANT

ORNAMENTAL WALL
NORTH & SOUTH WATERFALL
FEATURE -SECTIONAL PLAN

DATE
SHEET 52 OF
DWG. NO. A-6

PLOT DATE
CADD

A-6.DWG 12/11/2007 9:05:58 AM

HED-CLUB FIGURE 2.

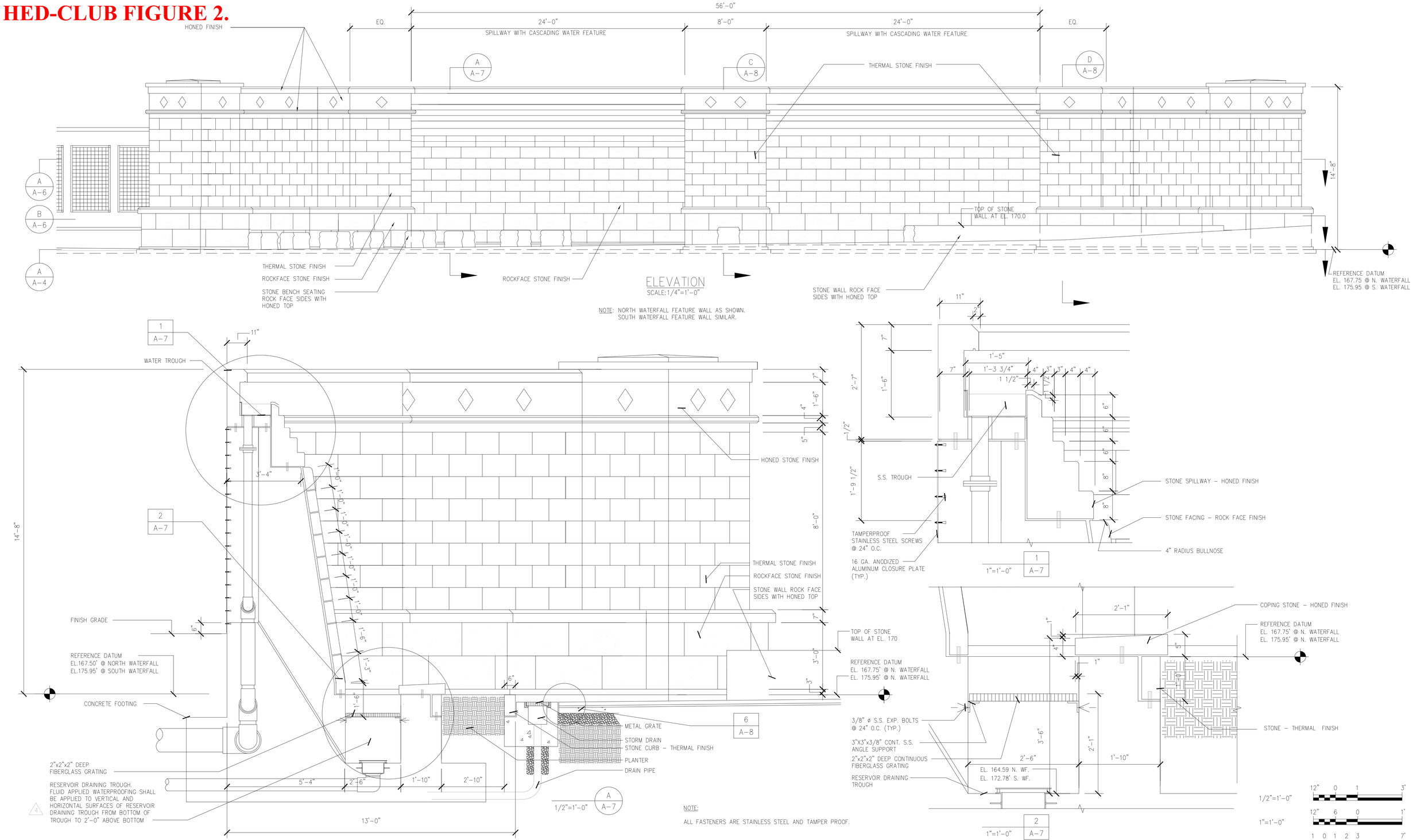

NOTE:

ALL FASTENERS ARE STAINLESS STEEL AND TAMPER PROOF.

NO.	DATE	ISSUED FOR	BY
A	JULY 2004	CONFORMED DRAWINGS	ASN
4	APRIL 2004	ADDENDUM NO. 4	ASN
0	FEB 2004	ADDENDUM NO. 2	ASN

CADD DATE

WARNING

IT IS A VIOLATION OF SECTION 7209.2 OF THE NEW YORK STATE EDUCATION LAW FOR ANY PERSON, UNLESS ACTING UNDER THE DIRECTION OF A LICENSED PROFESSIONAL ENGINEER, TO ALTER IN ANY WAY PLANS, SPECIFICATIONS, PLATS OR REPORTS TO WHICH THE SEAL OF A PROFESSIONAL ENGINEER HAS BEEN APPLIED. IF AN ITEM BEARING THE SEAL OF A PROFESSIONAL ENGINEER IS ALTERED, THE ALTERING ENGINEER SHALL AFFIX TO THE ITEM HIS SEAL AND THE NOTATION "ALTERED BY" FOLLOWED BY HIS SIGNATURE, THE DATE, AND A SPECIFIC DESCRIPTION OF THE ALTERATION.

DESIGNED AS
DRAWN VYT
CHECKED JAB
SECT.CHIEF HRW
PROJ.ENGR. ASN

SCALE AS SHOWN

STATE OF NEW YORK · ALAN STUART NATTER · LICENSED PROFESSIONAL ENGINEER · 056701

M&E Metcalf & Eddy of New York, Inc.
A JOINT VENTURE
HAZEN AND SAWYER
Environmental Engineers & Scientists

APPROVED FOR THE CITY OF NEW YORK
ORIGINAL ISSUE SIGNED BY
SWAPAN GANGOPADHYAY P.E.
EXECUTIVE PROJECT MANAGER
PAUL D. SMITH P.E.
CHIEF, DIVISION OF WATERSHED FACILITIES DESIGN

NEW YORK CITY DEPARTMENT OF ENVIRONMENTAL PROTECTION · DEP

CITY OF NEW YORK
DEPARTMENT OF ENVIRONMENTAL PROTECTION
BUREAU OF ENVIRONMENTAL ENGINEERING
DIVISION OF WATERSHED FACILITIES DESIGN
WM-11 CROTON WATER TREATMENT PLANT

CONTRACT CRO-311
SITE PREPARATION
ORNAMENTAL WALL–
WATERFALL FEATURE
ELEVATION, SECTION AND DETAILS

DATE FEBRUARY 2004
SHEET 53 OF 98
DWG. NO. A-7

PLOT DATE

A-7.DWG 12/11/2007 9:06:28 AM

HED-CLUB FIGURE 2.

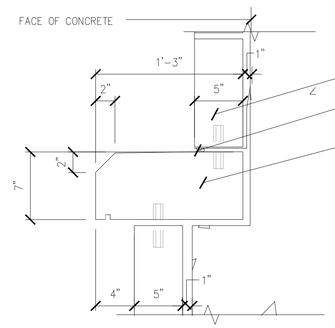

1 1/2"=1'-0" | 1 | A-8

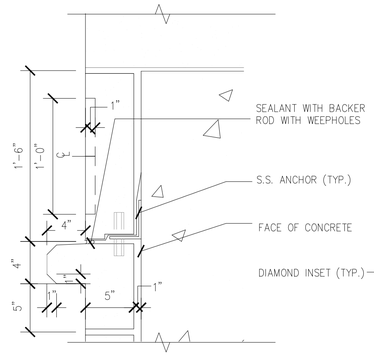

1 1/2"=1'-0" | 2 | A-8

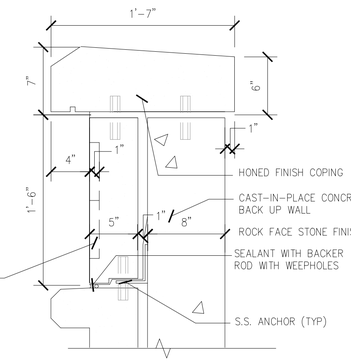

1 1/2"=1'-0" | 3 | A-8

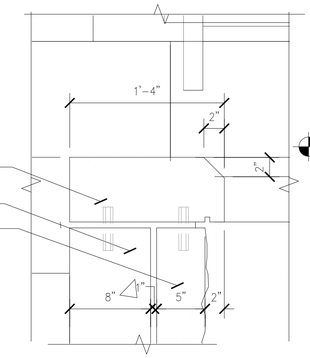

1 1/2"=1'-0" | 4 | A-8

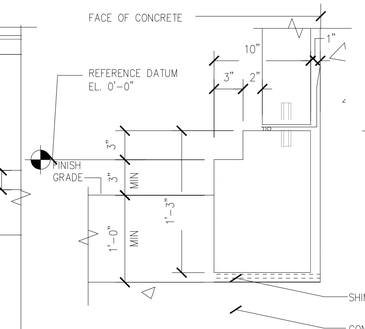

1 1/2"=1'-0" | 5 | A-8

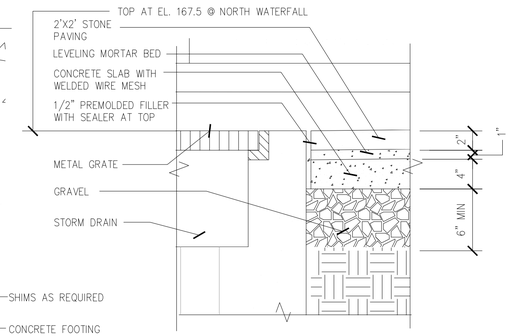

1 1/2"=1'-0" | 6 | A-7

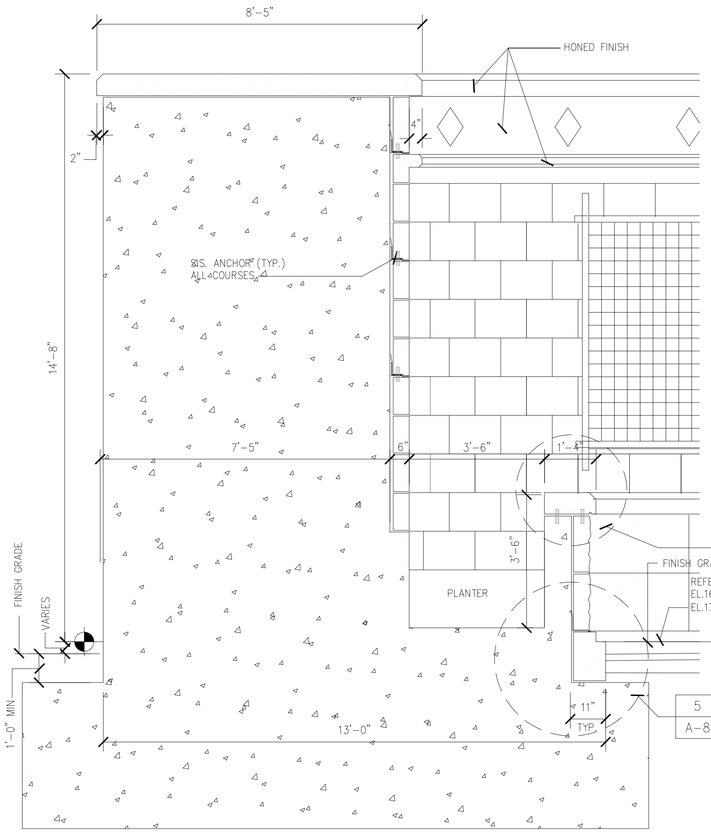

1/2"=1'-0" | D | A-4,A-5,A-6

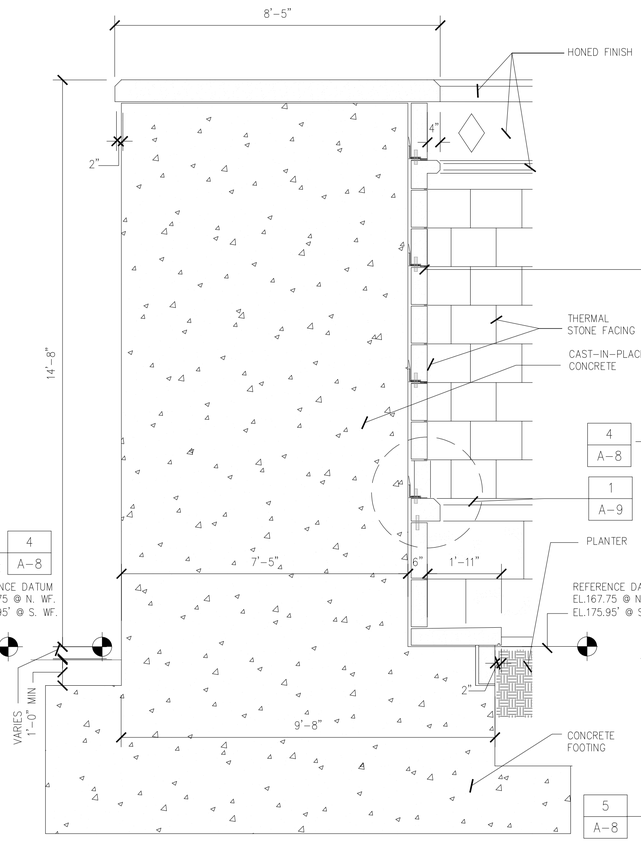

1/2"=1'-0" | C | A-4,A-5,A-6

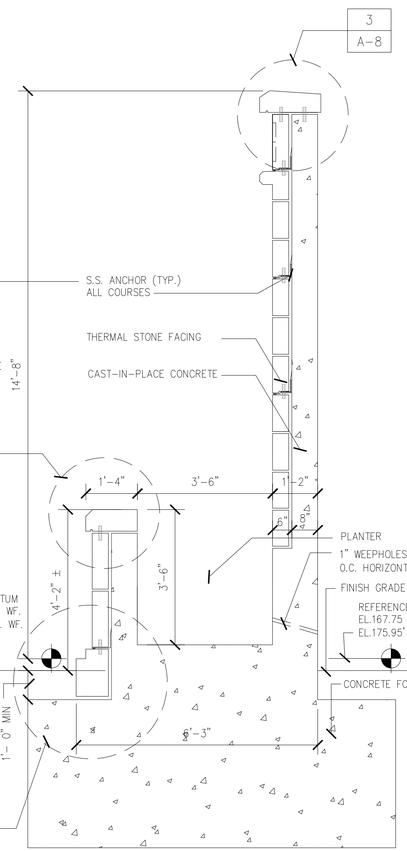

1/2"=1'-0" | B | A-4,A-5,A-6

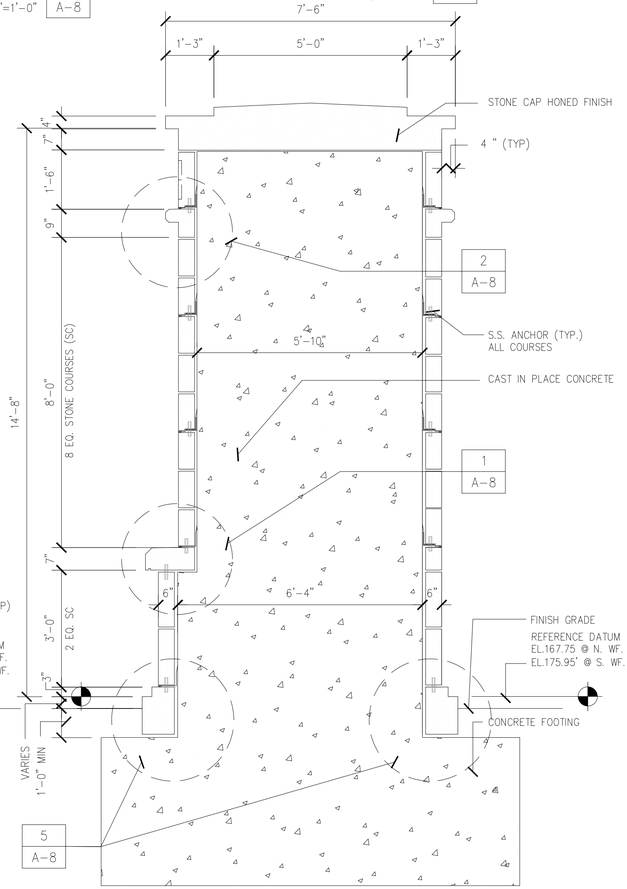

1/2"=1'-0" | A | A-4,A-5,A-6

1/2"=1'-0" 12" 0 1 3'

1-1/2"=1'-0" 12" 6 0 1'

NO.	DATE	ISSUED FOR	BY
A	JULY 2004	CONFORMED DRAWINGS	ASN
0	FEB 2004	ADDENDUM NO. 2	ASN

WARNING:
IT IS A VIOLATION OF SECTION 7209.2 OF THE NEW YORK STATE EDUCATION LAW FOR ANY PERSON, UNLESS ACTING UNDER THE DIRECTION OF A LICENSED PROFESSIONAL ENGINEER, TO ALTER IN ANY WAY PLANS, SPECIFICATIONS, PLATS OR REPORTS TO WHICH THE SEAL OF A PROFESSIONAL ENGINEER HAS BEEN APPLIED. IF AN ITEM BEARING THE SEAL OF A PROFESSIONAL ENGINEER IS ALTERED, THE ALTERING ENGINEER SHALL AFFIX TO THE ITEM HIS SEAL AND THE NOTATION "ALTERED BY" FOLLOWED BY HIS SIGNATURE, THE DATE, AND A SPECIFIC DESCRIPTION OF THE ALTERATION.

DESIGNED AS
DRAWN VYT
CHECKED JAB
SECT.CHIEF HRW
PROJ.ENGR. ASN

SCALE AS SHOWN

STATE OF NEW YORK · ALAN STUART NATHE · 066207 · LICENSED PROFESSIONAL ENGINEER

M&E Metcalf & Eddy of New York, Inc.
A JOINT VENTURE
HAZEN AND SAWYER
Environmental Engineers & Scientists

APPROVED FOR THE CITY OF NEW YORK
ORIGINAL ISSUE SIGNED BY
SWAPAN GANGOPADHYAY P.E.
EXECUTIVE PROJECT MANAGER
PAUL D. SMITH P.E.
CHIEF, DIVISION OF WATERSHED FACILITIES DESIGN

NEW YORK CITY DEPARTMENT OF DEP ENVIRONMENTAL PROTECTION

CITY OF NEW YORK
DEPARTMENT OF ENVIRONMENTAL PROTECTION
BUREAU OF ENVIRONMENTAL ENGINEERING
DIVISION OF WATERSHED FACILITIES DESIGN
WM-11 CROTON WATER TREATMENT PLANT

CONTRACT CRO-311
SITE PREPARATION
ORNAMENTAL WALL
MISCELLANEOUS SECTIONS & DETAILS I

DATE FEBRUARY 2004
SHEET 54 OF 98
DWG. NO. A-8

PLOT DATE
CADD DATE
A-8.DWG 12/11/2007 9:07:31 AM

HED-CLUB FIGURE 2.

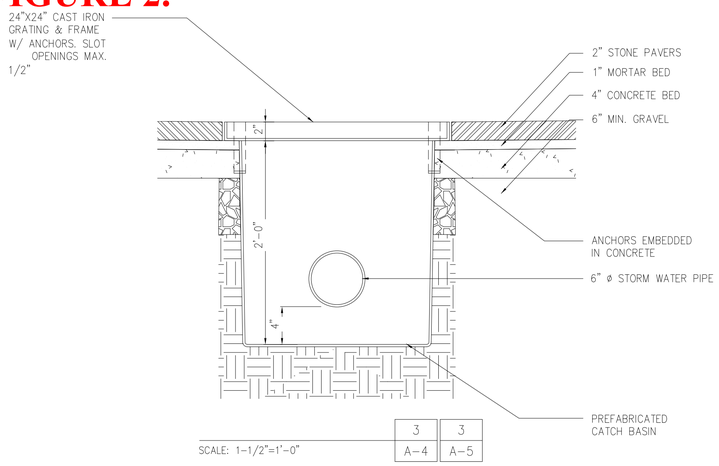

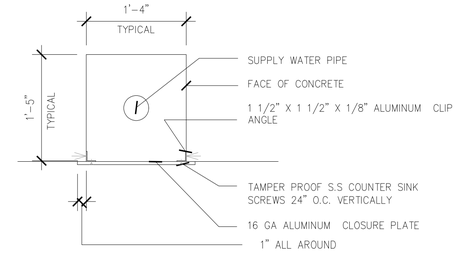

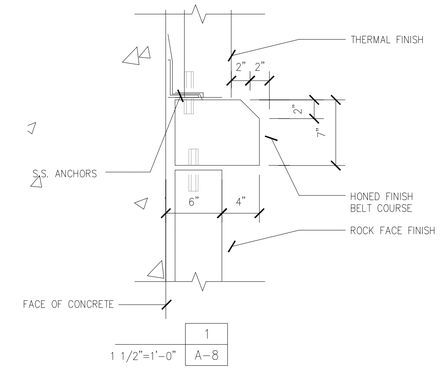

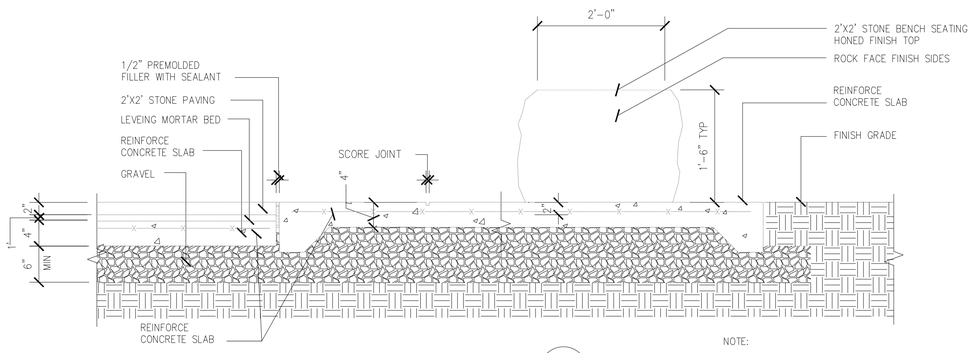

NOTE:

1. PROVIDE REINFORCING STEEL PER DWG. S-5W, SECTION A/S-5W

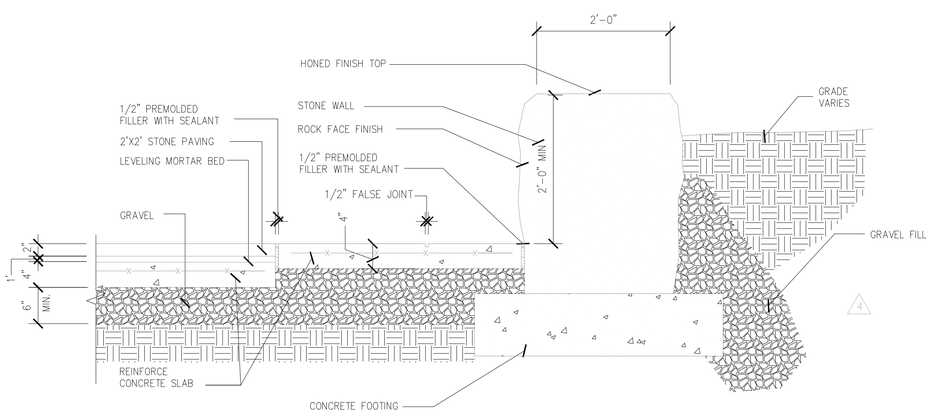

NOTE:

1. PROVIDE REINFORCING STEEL PER DWG. S-5W, SECTION B/S-5W

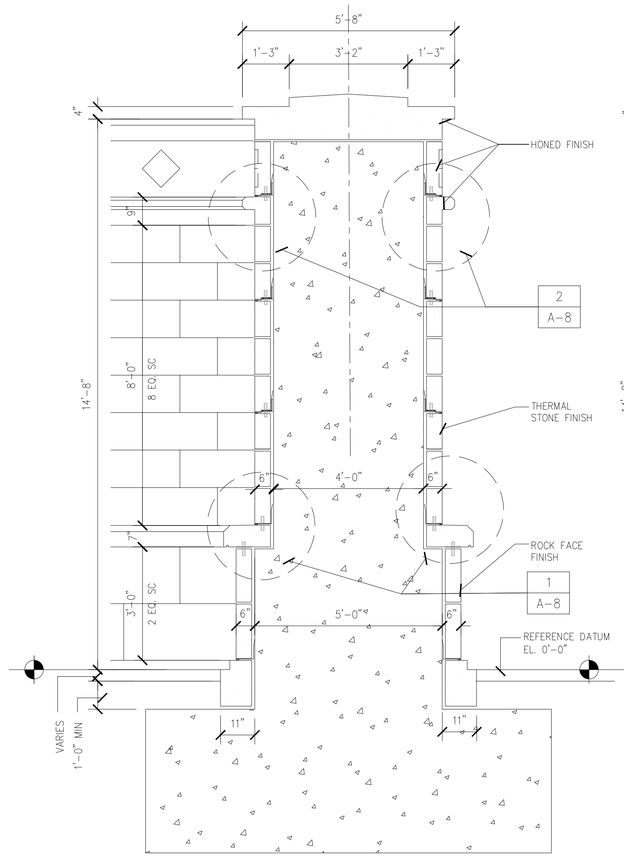

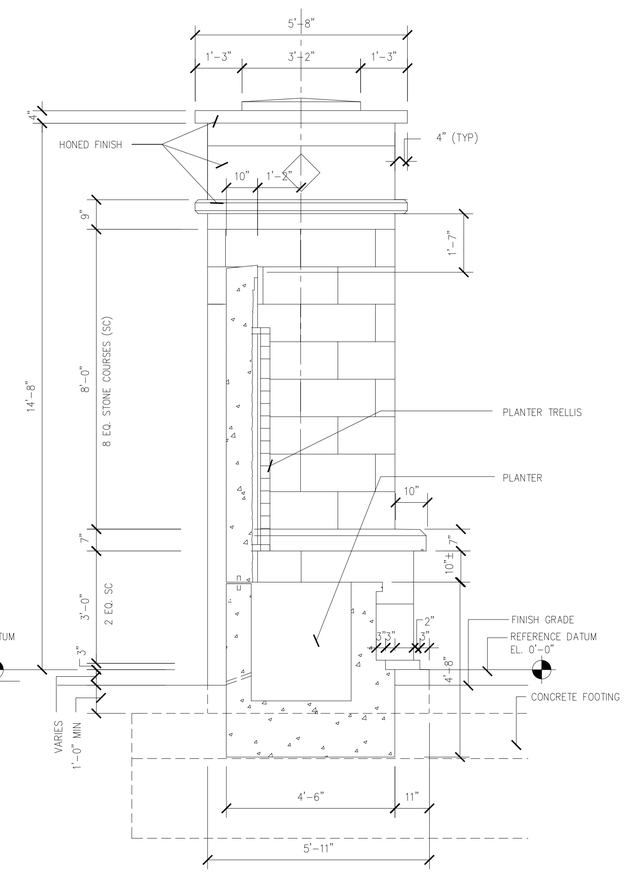

1/2"=1'-0" 12" 0 1 3'

1"=1'-0" 12" 6 0 1'

NO.	DATE	ISSUED FOR	BY
A	JULY 2004	CONFORMED DRAWINGS	ASN
5	APRIL 2004	ADDENDUM NO. 5	ASN
4	APRIL 2004	ADDENDUM NO. 4	ASN
0	FEB 2004	ADDENDUM NO. 2	ASN

CADD DATE

WARNING: IT IS A VIOLATION OF SECTION 7209.2 OF THE NEW YORK STATE EDUCATION LAW FOR ANY PERSON, UNLESS ACTING UNDER THE DIRECTION OF A LICENSED PROFESSIONAL ENGINEER, TO ALTER IN ANY WAY PLANS, SPECIFICATIONS, PLATS, OR REPORTS TO WHICH THE SEAL OF A PROFESSIONAL ENGINEER HAS BEEN APPLIED. IF AN ITEM BEARING THE SEAL OF A PROFESSIONAL ENGINEER IS ALTERED, THE ALTERING ENGINEER SHALL AFFIX TO THE ITEM HIS SEAL AND THE NOTATION "ALTERED BY" FOLLOWED BY HIS SIGNATURE, THE DATE, AND A SPECIFIC DESCRIPTION OF THE ALTERATION.

DESIGNED AS
DRAWN VYT
CHECKED JAB
SECT.CHIEF HRW
PROJ.ENGR. ASN

SCALE AS SHOWN

STATE OF NEW YORK · ALAN STUART WATTER · LICENSED PROFESSIONAL ENGINEER

M&E Metcalf & Eddy of New York, Inc.
A JOINT VENTURE
HAZEN AND SAWYER
Environmental Engineers & Scientists

APPROVED FOR THE CITY OF NEW YORK
ORIGINAL ISSUE SIGNED BY
SWAPAN GANGOPADHYAY P.E.
EXECUTIVE PROJECT MANAGER
PAUL D. SMITH P.E.
CHIEF, DIVISION OF WATERSHED FACILITIES DESIGN

NEW YORK CITY DEPARTMENT OF ENVIRONMENTAL PROTECTION

CITY OF NEW YORK
DEPARTMENT OF ENVIRONMENTAL PROTECTION
BUREAU OF ENVIRONMENTAL ENGINEERING
DIVISION OF WATERSHED FACILITIES DESIGN
WM-11 CROTON WATER TREATMENT PLANT

CONTRACT CRO-311
SITE PREPARATION
ORNAMENTAL WALL
MISCELLANEOUS SECTIONS & DETAILS II

DATE FEBRUARY 2004
SHEET 55 OF 98
DWG. NO. A-9

PLOT DATE

a:\9.DWG 12/11/2007 9:08:20 AM